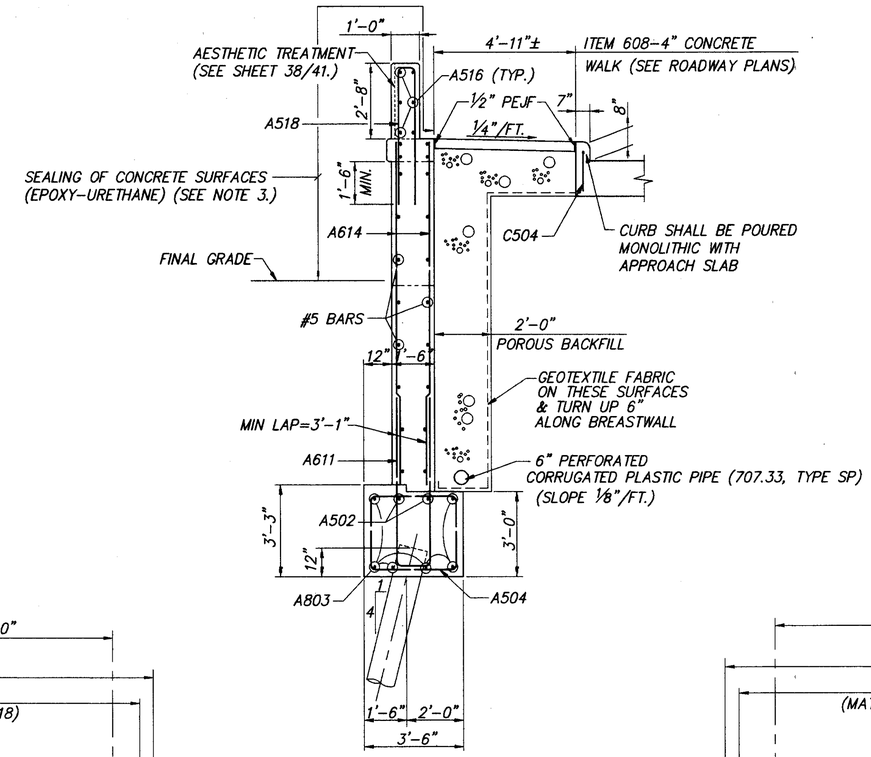

SECTION E-E

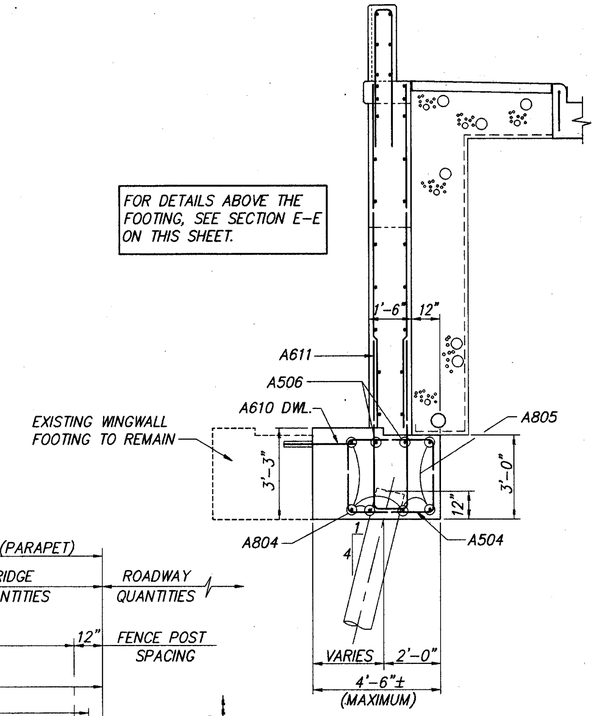

SECTION F-F

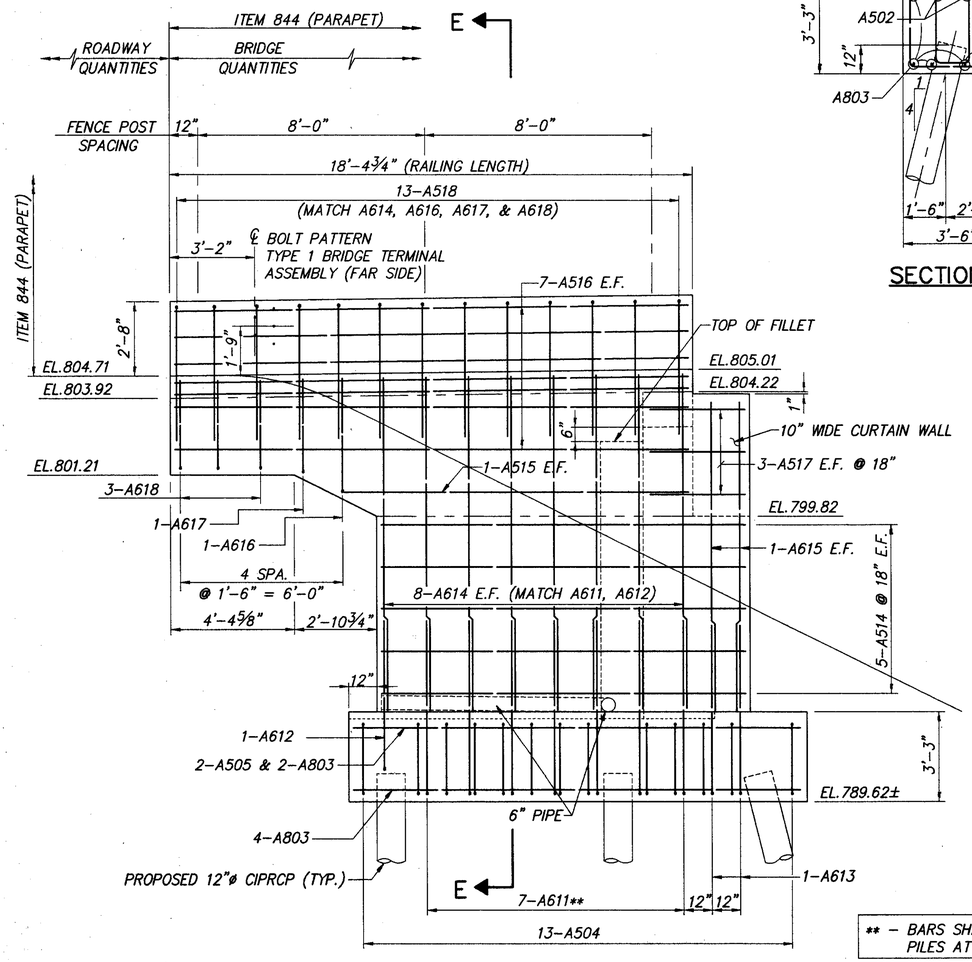

RIGHT REAR WINGWALL

** - BARS SHALL BE EQUALLY SPACED BETWEEN PILES AT 18" MAXIMUM.

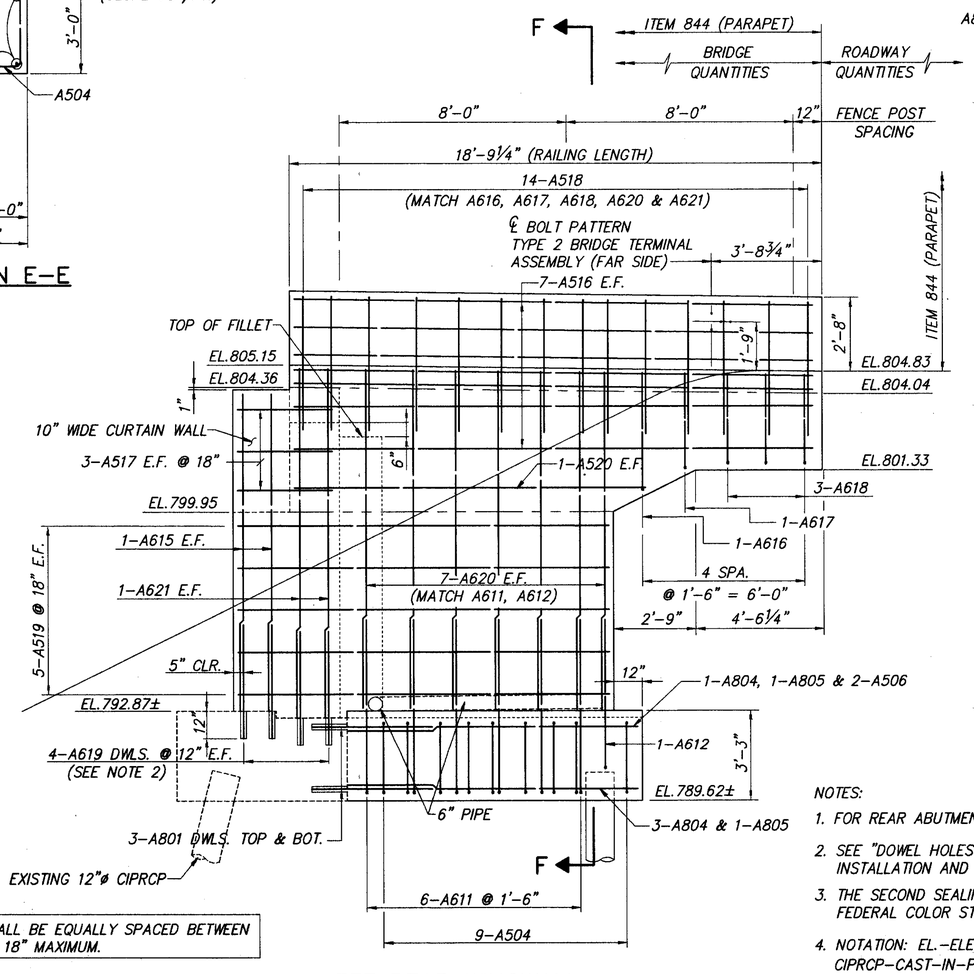

LEFT REAR WINGWALL

NOTES:

1. FOR REAR ABUTMENT PLAN AND ELEVATION, SEE SHEET 16/41.
2. SEE "DOWEL HOLES" GENERAL NOTE ON SHEET 4/41 FOR INSTALLATION AND PAYMENT INFORMATION.
3. THE SECOND SEALING COAT ONLY SHALL BE TINTED TO FEDERAL COLOR STANDARD 59B-25630 SEMI-GLOSS.
4. NOTATION: EL.-ELEVATION; E.F.-EACH FACE; TYP.-TYPICAL CIPRCP-CAST-IN-PLACE REINFORCED CONCRETE PILES; CLR.-CLEAR; SPA.-SPACES; DWL.-DOWEL.

CT Consultants
Engineers • Architects • Planners

DESIGNED	DRAWN	REVIEWED	DATE
I.A.S.	R.L.B.	J.E.A.	10/26/01
CHECKED	REVISED	STRUCTURE FILE NUMBER	
J.P.R.	-	4304055	

REAR WINGWALL DETAILS

BRIDGE NO. LAK-90-0945
S.R. 615 OVER INTERSTATE 90

LAK-IR90/SR615-
9.26/1.51

H:\CT\97125\CAD\9712501.DWG PLOT SCALE 1:32