MICROFILMED
JAN 27 1995

FED. RD. DIVISION	STATE	PROJECT	
2	OHIO		

253
277

LAKE COUNTY
SEC. LAK-1-6.97

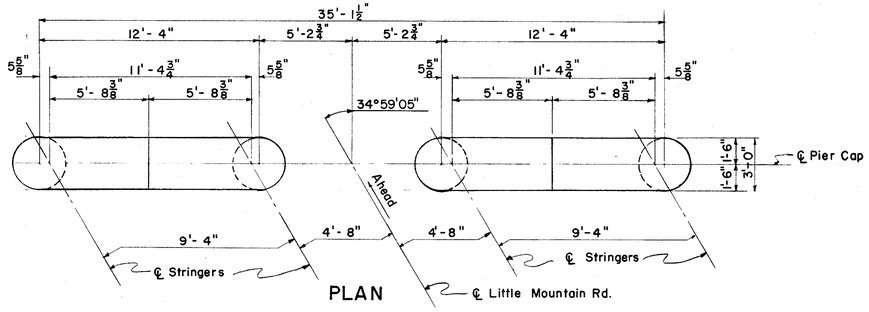

PLAN

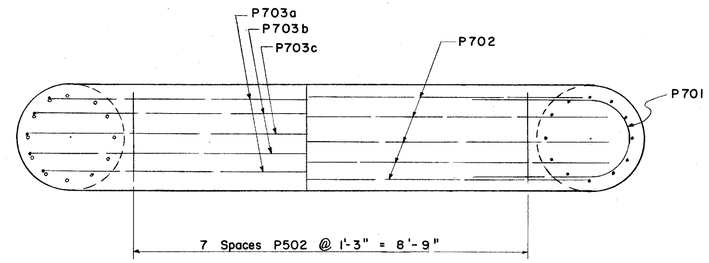

SECTION B-B

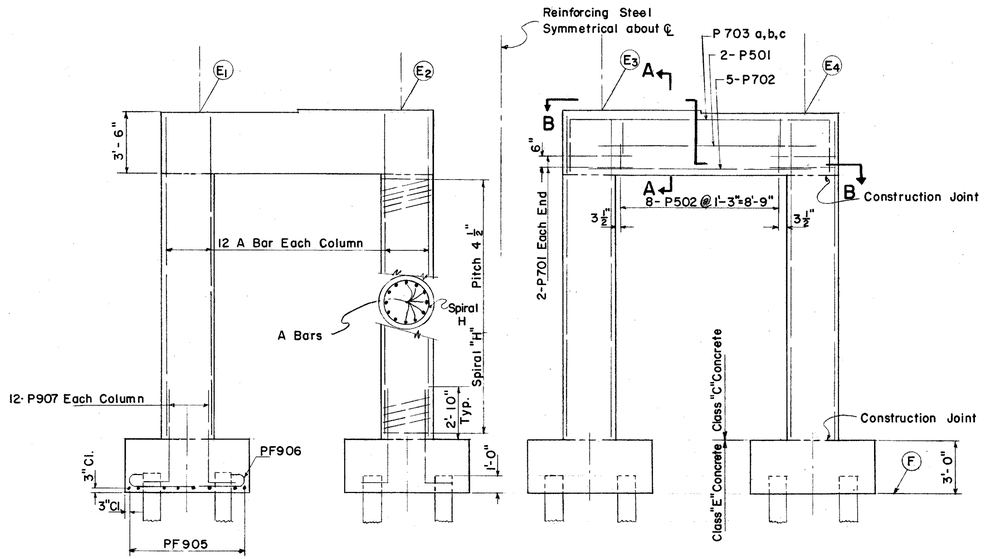

ELEVATION

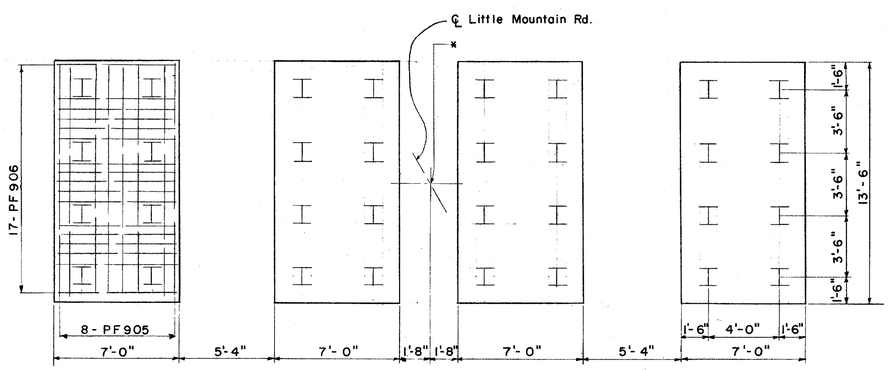

FOOTING PLAN

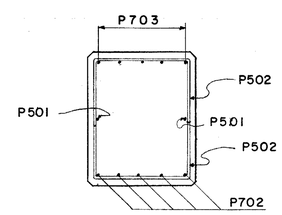

SECTION A-A

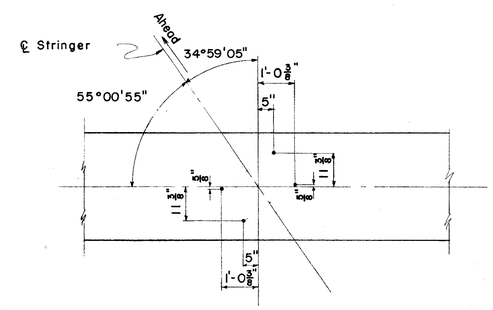

ANCHOR BOLT LAYOUT PIER 3

NOTES:

Reinforcing Steel is identical in all pier except as noted.

Special care shall be taken in placing the P703 Bars in the cap on Pier # 3 so they do not interfere with the drilling of anchor bolt holes.

Reinforcing Steel shall have a minimum of 2" of cover from all faces except as otherwise shown.

LOCATION	STATION *	E_1	E_2	E_3	E_4	F	Bar A	Spiral H
Pier # 1	7+99.20	780.83	781.02	781.05	780.93	758.00	P901	SP 401
Pier # 2	8+85.70	780.38	780.56	780.60	780.48	757.00	P902	SP 402
Pier # 3	9+72.20	779.93	780.11	780.15	780.03	756.50	P902	SP 402
Pier # 4	10+58.70	779.48	779.66	779.70	779.58	756.50	P903	SP 403
Pier # 5	11+45.20	779.03	779.21	779.25	779.13	757.00	P904	SP 404

SEC. C-31

PREPARED BY
CAPITOL ENGINEERING ASSOCIATES, DILLSBURG, PA.
FOR

STATE OF OHIO
DEPARTMENT OF HIGHWAYS
DIVISION OF DESIGN AND CONSTRUCTION
BUREAU OF BRIDGES

PIERS
BRIDGE NO. LAK.-1-0930
S.R. 1 UNDER LITTLE MOUNTAIN ROAD
LAKE COUNTY
STA. 133+23.74

DESIGNED	DRAWN	TRACED	CHECKED	REVIEWED	DATE	REVISED
JEB	JEB.		WCL			