MICROFILMED
JUN 27 1985

FED. RD. DIVISION	STATE	PROJECT	
2	OHIO		

252
277

LAKE COUNTY
SEC. LAK-1-6.97

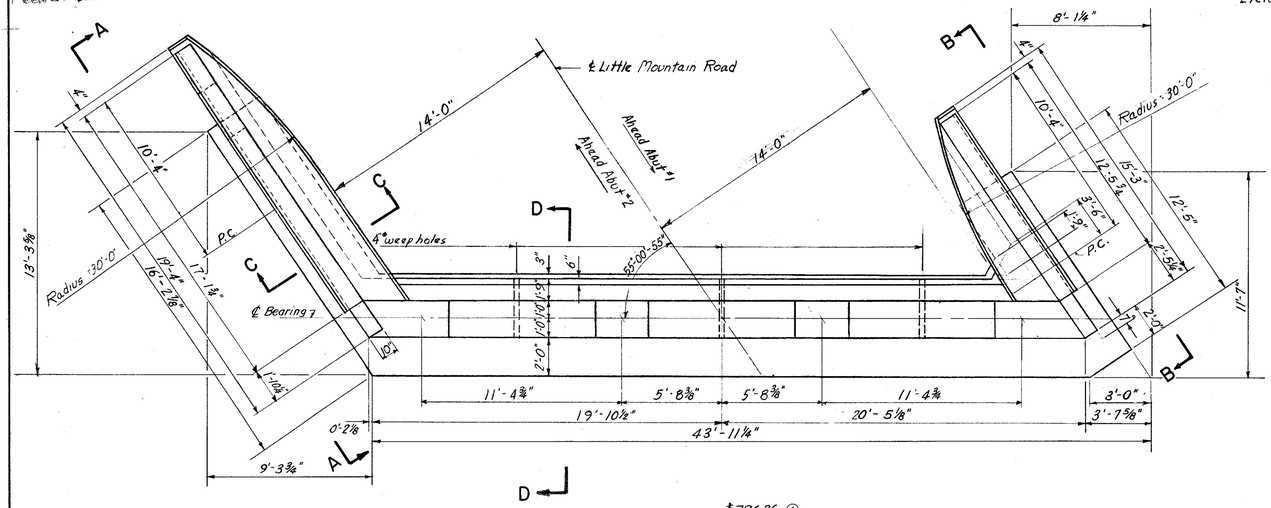

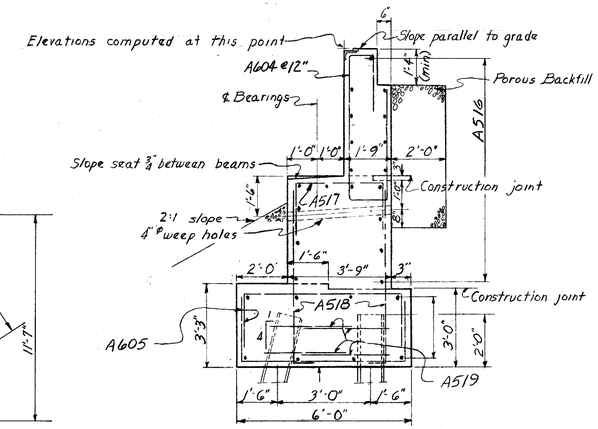

SECTION D-D

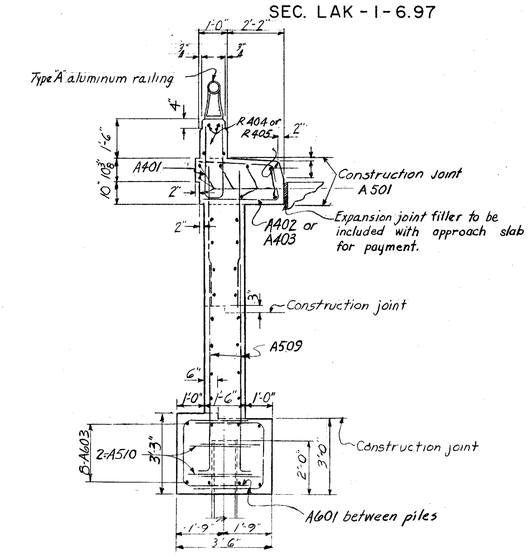

SECTION C-C

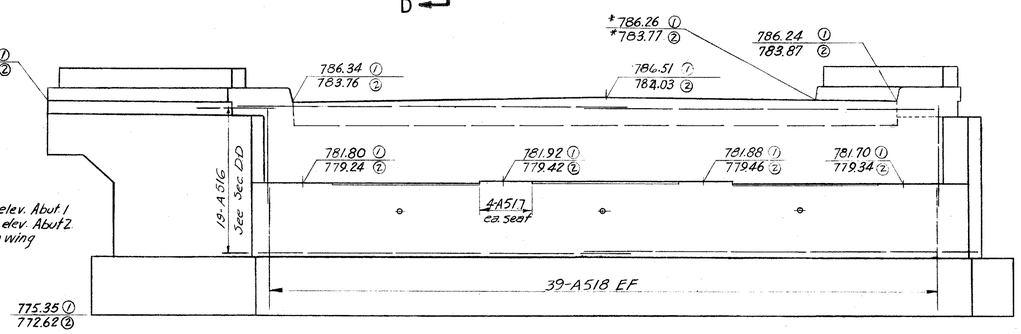

NOTE:
① indicates elev. Abut 1
② indicates elev. Abut 2
* elev. is on wing

ELEVATION

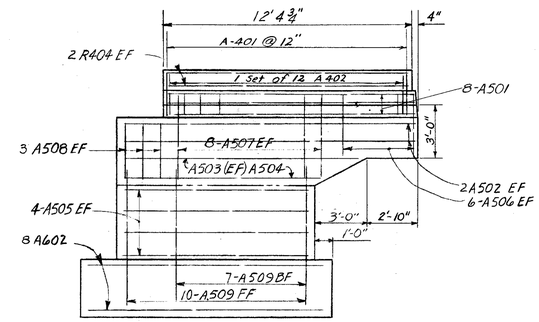

VIEW B-B

NOTES

Porous backfill shall extend upward to the Approach Slab and to the surface of the Earth Shoulders and outward to the surface of the Embankment Slopes. Excavation therefor, in excess of that required for construction of the abutment, shall be considered as paid for in the bid price per cu. yd. of porous backfill.

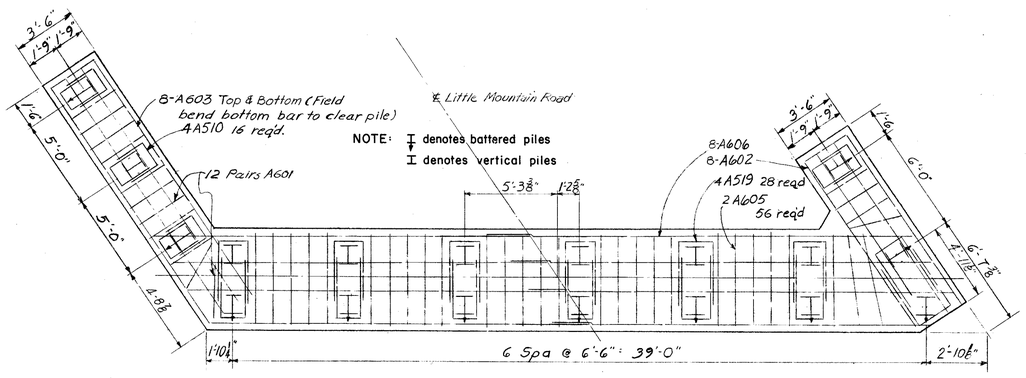

FOOTING PLAN

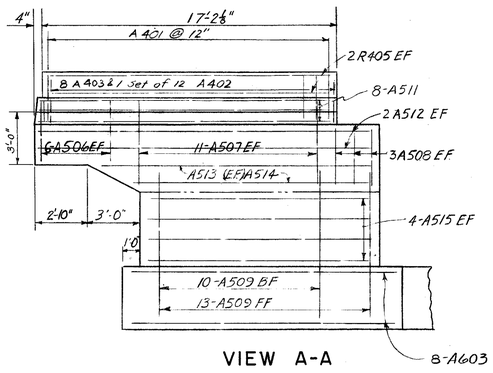

VIEW A-A

SEC. C-31

PREPARED BY
CAPITOL ENGINEERING ASSOCIATES, DILLSBURG, PA.
FOR

STATE OF OHIO
DEPARTMENT OF HIGHWAYS
DIVISION OF DESIGN AND CONSTRUCTION
BUREAU OF BRIDGES

ABUTMENTS
BRIDGE NO. LAK-1-0930
S. R. 1 UNDER LITTLE MOUNTAIN ROAD
LAKE COUNTY
STA. 133 + 23.74

DESIGNED	DRAWN	TRACED	CHECKED	REVISED	DATE	REVISED
JEB	WB JEB					