CALC. BY: DATE:		OHIO	75/92
CHK'D BY: DATE:		F.H.W.A. REGION 5	

LAKE COUNTY
LAK-90-17.42/25.15/27.76

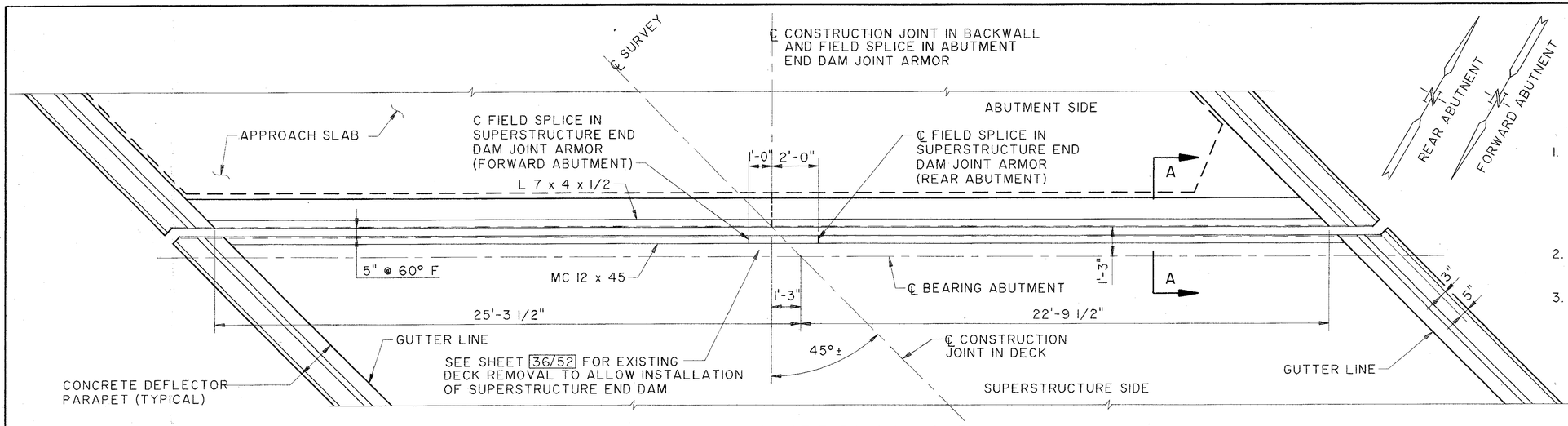

PLAN OF EXPANSION JOINT

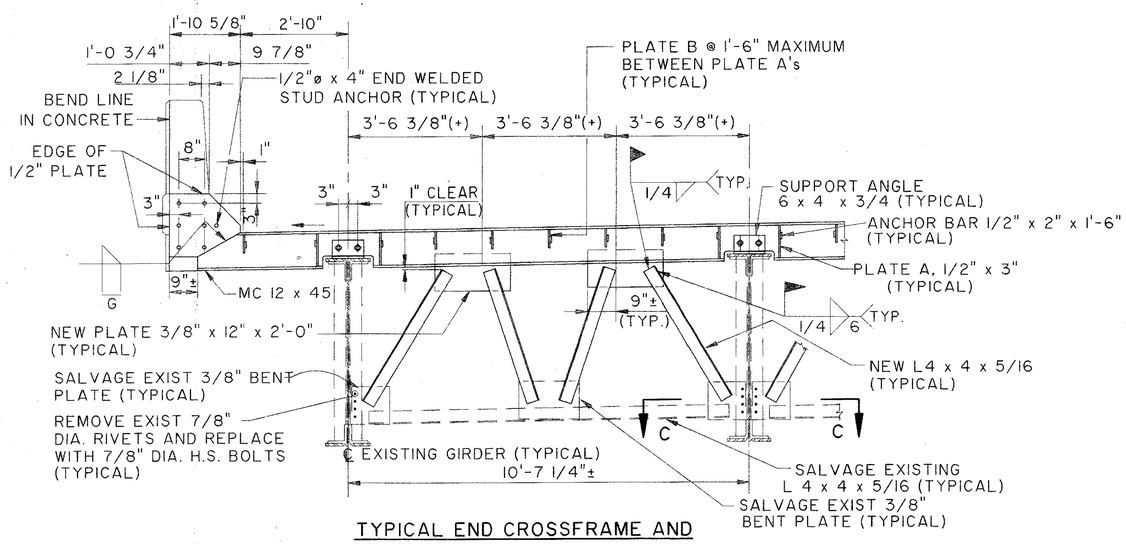

TYPICAL END CROSSFRAME AND NEW EXPANSION JOINT ARMOR ASSEMBLY DETAIL

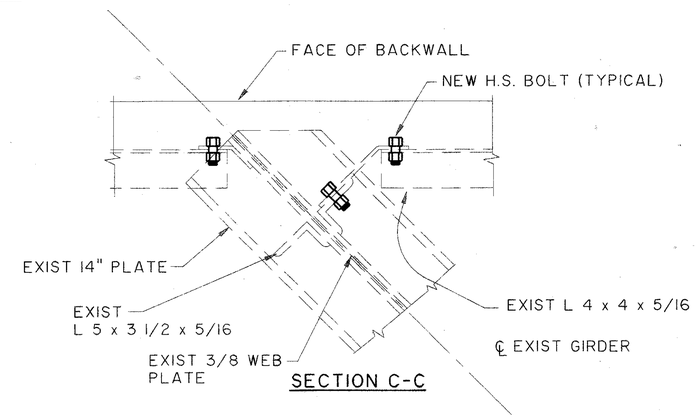

SECTION C-C

NOTES:

1. THE REMOVAL OF THE EXISTING TOP GUSSET PLATES, THE EXISTING END CROSSFRAME ANGLES AND EXISTING EXPANSION JOINT END DAMS SHALL BE INCLUDED WITH ITEM 202-PORTIONS OF STRUCTURE REMOVED, AS PER PLAN FOR PAYMENT.
2. FOR ADDITIONAL EXPANSION JOINT DETAILS SEE STANDARD DRAWINGS EXJ-4-87.
3. THE CONTRACTOR MAY ELECT TO DISASSEMBLE EXISTING END CROSSFRAME IN PART OR WHOLE AS PART OF THE BACKWALL DEMOLITION SCHEME. MINIMUM SIZE OF CONNECTION BOLTS TO REPLACE EXISTING RIVETS SHALL BE 3/4"ø ASTM A325 GALVANIZED HIGH STRENGTH BOLTS. ALL COSTS ASSOCIATED WITH THE DISASSEMBLY AND REASSEMBLY OF THE EXISTING CROSSFRAMES SHALL BE CONSIDERED AS INCIDENTAL TO THE ITEM 202 - PORTIONS OF STRUCTURE REMOVED, AS PER PLAN.
4. STRIP SEAL GLANDS SHALL BE FURNISHED AND INSTALLED IN A CONTINUOUS PIECE.
5. INSTALLATION OF SEAL: DURING INSTALLATION OF THE SUPPORT/ARMOR FOR THE SUPERSTRUCTURE SIDE OF THE EXPANSION JOINT SEAL, THE SEATING OF BEAMS ON BEARINGS SHALL BE CAREFULLY OBSERVED TO ASSURE THAT POSITIVE BEARING IS MAINTAINED. PROPER VERTICAL FIT OF THE SUPPORT/ARMOR ON THE BEAMS SHALL BE ACHIEVED BY POSITIONING OF THE BEVEL FILL PLATES RATHER THAN BY CLAMPING FORCE.
6. ALL MATERIALS AND LABOR COSTS ASSOCIATED WITH THE REASSEMBLY OF THE EXISTING CROSSFRAMES WITH THE REPLACEMENT ANGLES AS SHOWN SHALL BE PAID FOR UNDER ITEM 513, STRUCTURAL STEEL FOR REHABILITATION, AS PER PLAN.
7. FIELD CUT FILLER PLATE AS REQUIRED TO AVOID INTERFERENCE WITH EXISTING RIVETS. INCLUDE WITH ITEM 863 FOR PAYMENT. WELD FILLER PLATE TO EXISTING COVER PLATE.

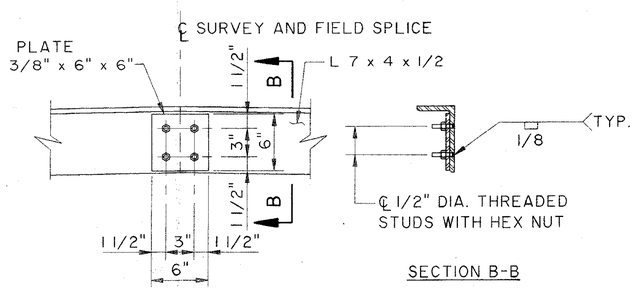

ABUTMENT END DAM

SECTION B-B

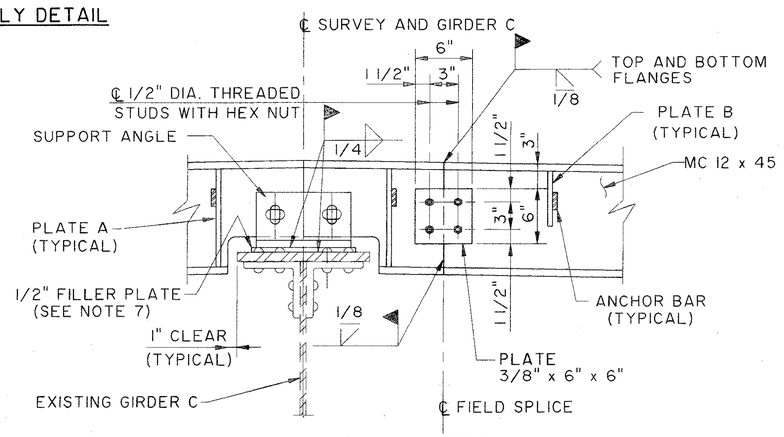

SUPERSTRUCTURE END DAM

SPLICE DETAILS FOR END DAM ARMOR

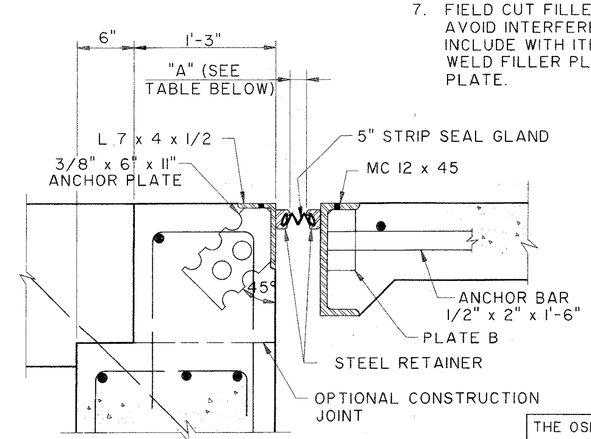

SECTION A-A

DIMENSION "A" FOR DECK JOINT OPENING						
30°	40°	50°	60°	70°	80°	90°
2 7/8"	2 3/4"	2 5/8"	2 1/2"	2 3/8"	2 1/4"	2 1/8"

THE OSBORN ENGINEERING COMPANY 35/52
CONSULTING ENGINEERS
CLEVELAND, OHIO 44114

EXPANSION JOINT AND END CROSSFRAME DETAILS
BRIDGE NO. LAK-90-2515
RIVER ROAD OVER I-90

LAKE COUNTY OHIO

DESIGNED	DRAWN	TRACED	CHECKED	REVIEWED	DATE	REVISED
LYH	BFG		JRS	GA	2/94	

RIVER ROAD

Filename : K:\ADL1\0001\0185\STRUCT\0185\748
Port Size : 36.00" x 24.00"
Date/Time : BFG / 02-17-94 (1:16)