V-10

LAK-90-13.86-29.20

| FED. RD. DIVISION | STATE | PROJECT | |
|---|---|---|---|
| 2 | OHIO | | |

40
81

LAKE COUNTY
ASHTABULA COUNTY
LAK.-1-12.89
ATB.-1-0.00

Proj. 2-60

# N-3-270

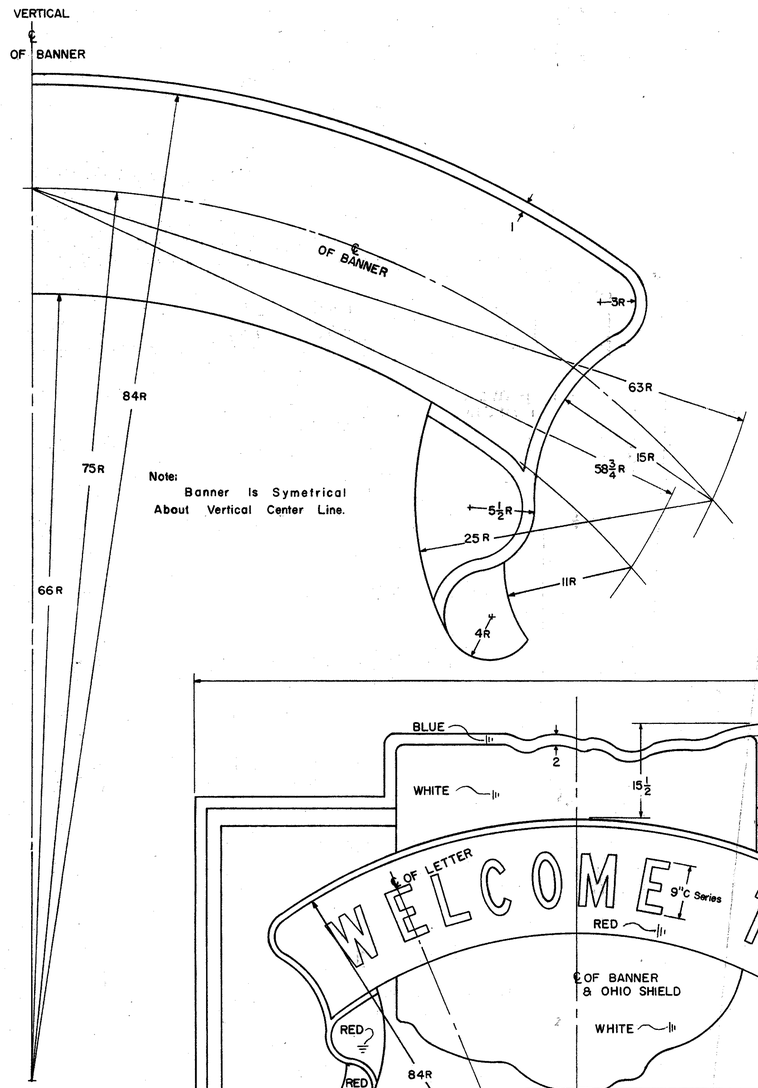


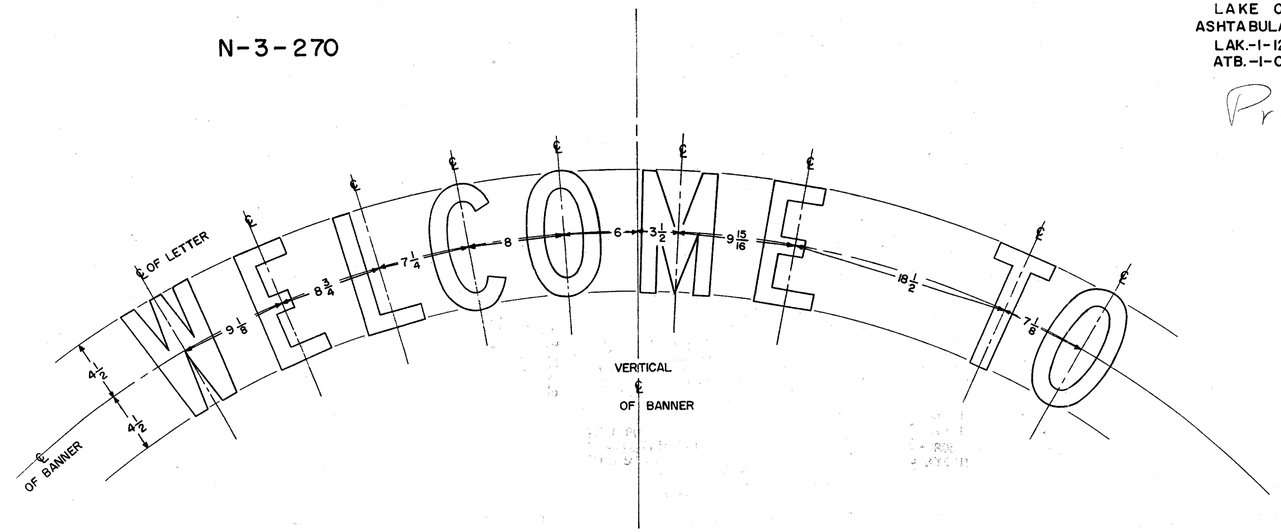


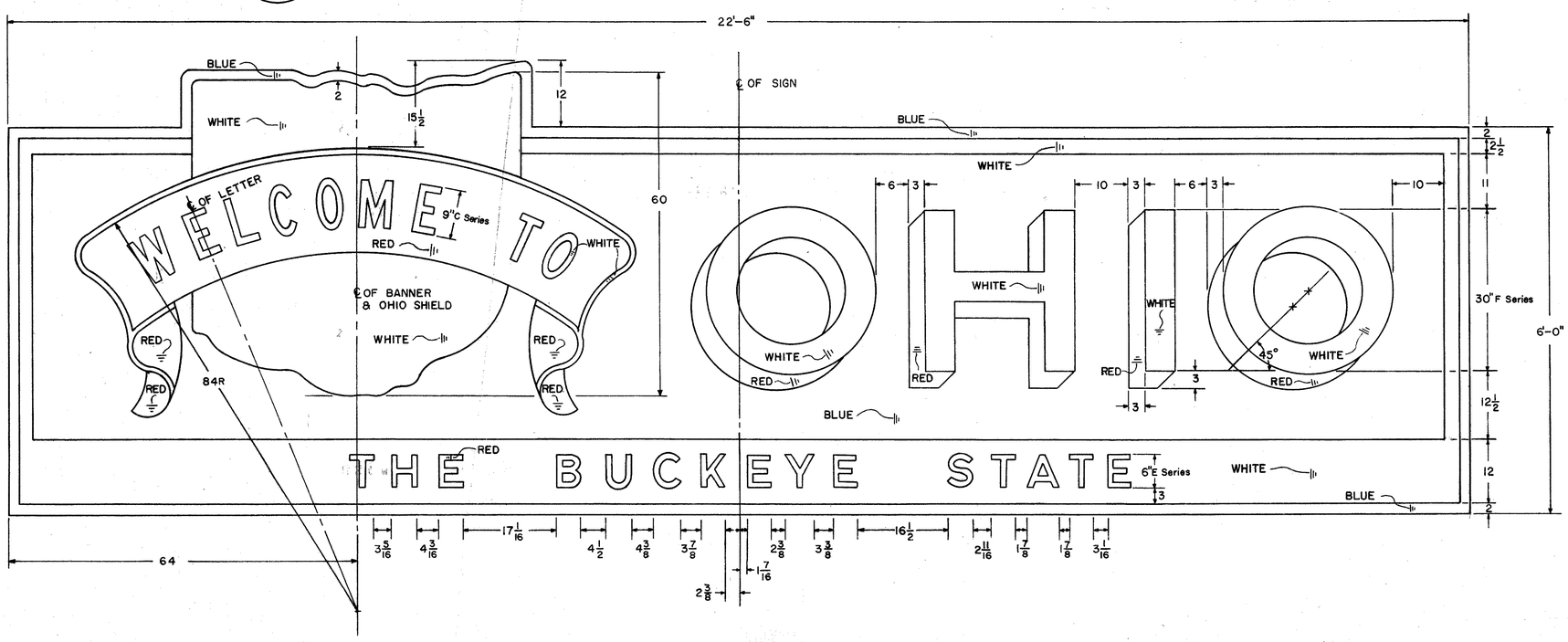


## NOTES

THE OHIO SHIELD MAY BE PANTOGRAPHED UP TO THE SIZE REQUIRED BY USING A STANDARD M-2-36 OHIO MARKER PLATE AS A BASE OR THE OHIO SHIELD MAY BE DRAWN TO THE REQUIRED SIZE BY PROPORTIONING THE DIMENSIONS SHOWN FOR THE M-2-36 OHIO MARKER DESIGN.

THE OHIO SHIELD AND THE BANNER SHALL BE OF THE REFLECTIVE SHEETING TYPE MOUNTED AS SEPARATE AND COMPLETE UNITS. ALL LETTERS SHALL BE OF THE DEMOUNTABLE REFLECTIVE SHEETING TYPE AS PER SEC. 1-128.08(1).

THE BACKGROUND, BORDER AND MARGIN SHALL BE FINISHED WITH REFLECTIVE SHEETING.

ALL REFLECTIVE SHEETING SHALL BE TYPE "F" AND OF THE COLOR DESIGNATED ON THE DESIGN. WHERE "WHITE" IS SPECIFIED, SILVER WHITE GRADE B SHALL BE USED.

ALL DIMENSIONS ARE IN INCHES UNLESS OTHERWISE SHOWN.