# TYPICAL SECTIONS

TYPE 404 ON 304

| FED.RD. DIVISION | STATE | PROJECT | |
|---|---|---|---|
| 5 | OHIO | | |



LAKE COUNTY
LAK-86-2.23

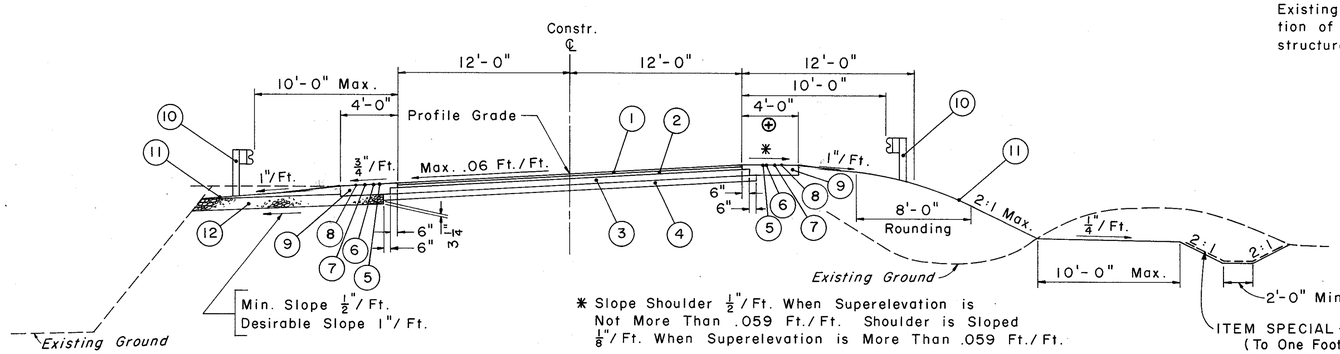


✱ Slope Shoulder 1/2"/Ft. When Superelevation is Not More Than .059 Ft./Ft. Shoulder is Sloped 1/8"/Ft. When Superelevation is More Than .059 Ft./Ft.

ITEM SPECIAL - DITCH PROTECTION
(To One Foot Depth of Ditch)
Sta. 6+50 to Sta. 9+83, Rt.

S.R. 86 (PAINESVILLE - WARREN ROAD)
SUPERELEVATED SECTION
STA. 6+50 TO STA. 9+43.18

Note: Traffic to be Carried by Existing Bridge During Construction of Abutments and Superstructure of Stage 1.

Note: One - Lane Traffic on Stage 1 Will be Maintained Using Temporary Signalization During Construction of Abutments and Superstructure of Stage 2.

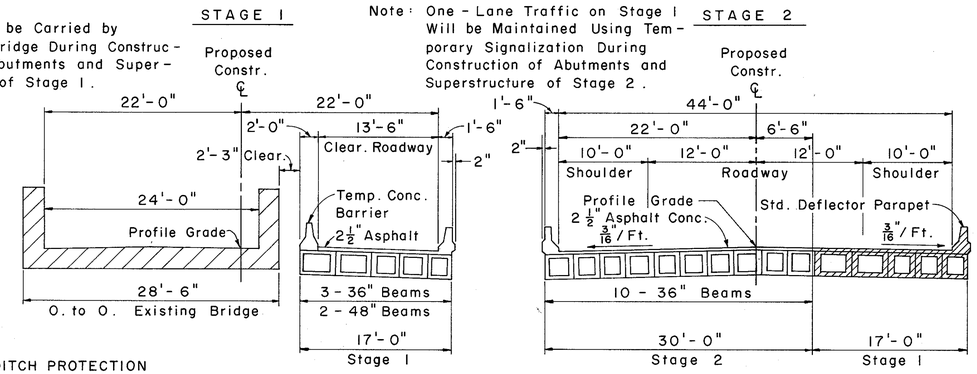


STAGE CONSTRUCTION FOR NEW STRUCTURE
S.R. 86 (PAINESVILLE - WARREN ROAD)

Varies to Accommodate Guard Rail Installations - See Cross Sections

⊕ SEE TEMP. PAV'T DETAIL AT RIGHT FOR SPECIAL SHOULDER CONSTRUCTION DETAILS

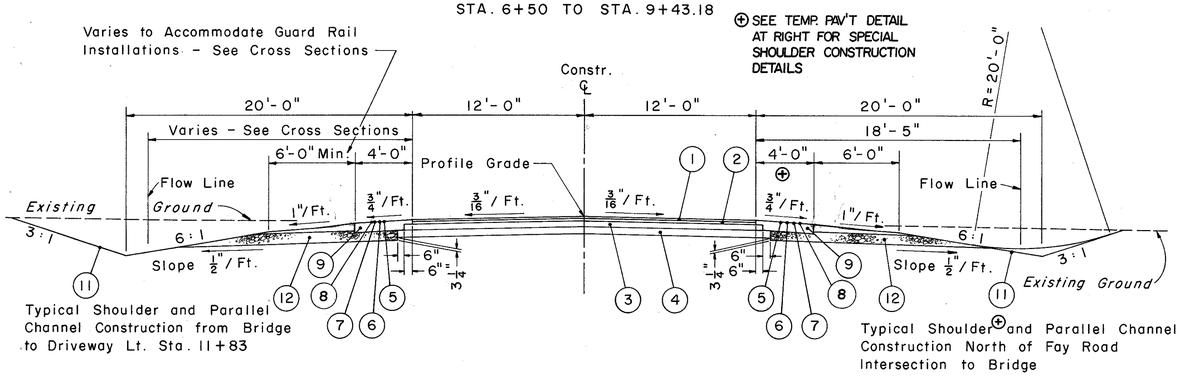


Typical Shoulder and Parallel Channel Construction from Bridge to Driveway Lt. Sta. 11+83

Typical Shoulder ⊕ and Parallel Channel Construction North of Fay Road Intersection to Bridge

S.R. 86 (PAINESVILLE - WARREN ROAD)
NORMAL SECTION
STA. 9+43.18 TO STA. 9+72.88
STA. 9+72.88 TO STA. 10+40.12 - STRUCTURE
STA. 10+40.12 TO STA. 10+64.00

✱ Permanent Erosion Flume Shall be Incorporated in the Construction of the Temporary Road Pavement. See Standard Construction Drawing MC-7 for Required Shaping.

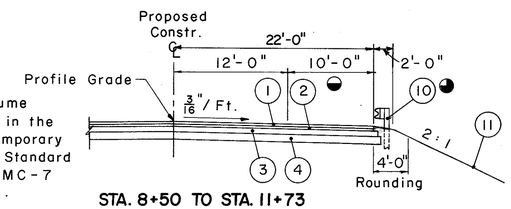


STA. 8+50 TO STA. 11+73

S.R. 86 (PAINESVILLE - WARREN ROAD)
STAGE CONSTRUCTION - ROADWAY APPROACHES TO STAGE 1
(LOOKING AHEAD STATIONS)

◒ Temporary Pavement, Type B, as per Plan.

◕ Permanent Guard Rail, Type 5, Shall be Installed to Accommodate the Temporary Road. Any Damaged Sections Shall be Replaced by the Contractor. Any Cost for Repairs Shall be Included in the Cost of Item 615, Temporary Roads.

✱ Slope Shoulder 1/2"/Ft. When Superelevation is Not More Than .059 Ft./Ft. Shoulder is Sloped 1/8"/Ft. When Superelevation is More Than .059 Ft./Ft.

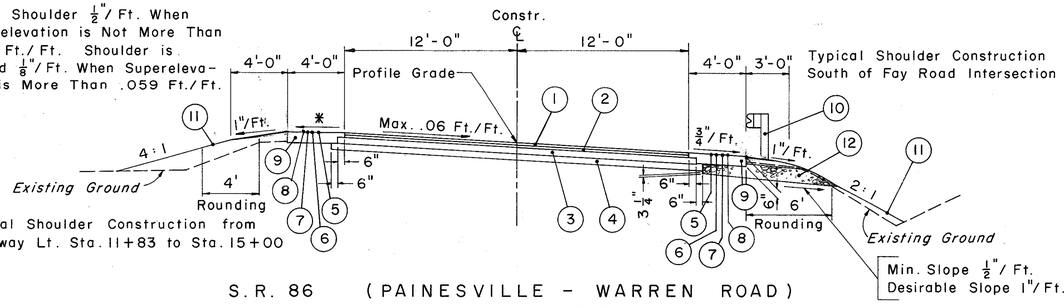


Typical Shoulder Construction from Driveway Lt. Sta. 11+83 to Sta. 15+00

Typical Shoulder Construction South of Fay Road Intersection

S.R. 86 (PAINESVILLE - WARREN ROAD)
SUPERELEVATED SECTION
STA. 10+64.00 TO STA. 15+00.00

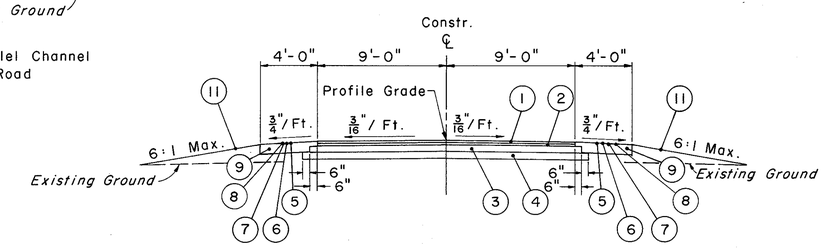


FAY ROAD
NORMAL SECTION
STA. 7+53.49 TO STA. 9+00

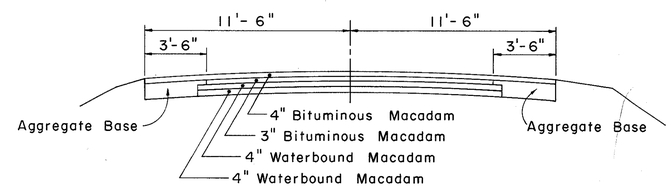


EXISTING TYPICAL SECTION

## LEGEND

| | | |
|---|---|---|
| 1 | Item 404 | 1 1/4" Asphalt Concrete AC-20 |
| 2 | Item 402 | 1 1/2" Asphalt Concrete AC-20 |
| 3 | Item 301 | 4" Bituminous Aggregate Base AC-20 or RT-11 or RT-12 |
| 4 | Item 304 | 4" Aggregate Base |
| 5 | Item 409 | Seal Coat Cover Aggregate No. 8 at 0.008 Cu. Yd. per Sq. Yd. |
| 6 | Item 409 | Seal Coat Bituminous Material at 0.30 Gal. per Sq. Yd. |
| 7 | Item 408 | Bituminous Prime Coat at 0.40 Gal. per Sq. Yd. |
| 8 | Item 408 | Cover Aggregate |
| 9 | Item 304 | 6" Aggregate Base |
| 10 | Item 606 | Guard Rail, Type 5 |
| 11 | Item 659 | Seeding and Mulching |
| 12 | Item 605 | Aggregate Drains |

Rev. 10-17-84