This is an image reproduction.
The scales as shown have been distorted.

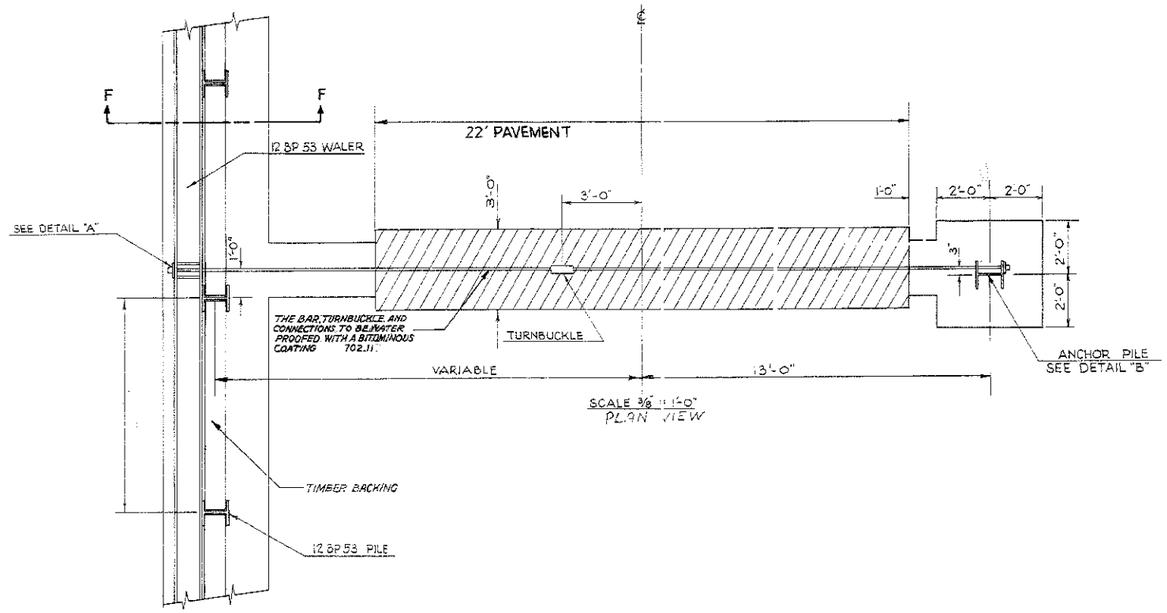

SCALE 3/8" = 1'-0"
PLAN VIEW

NOTE
Any space between the existing pile and waler shall be built up using modified steel members as shims, welded in place, as directed by the Engineer.

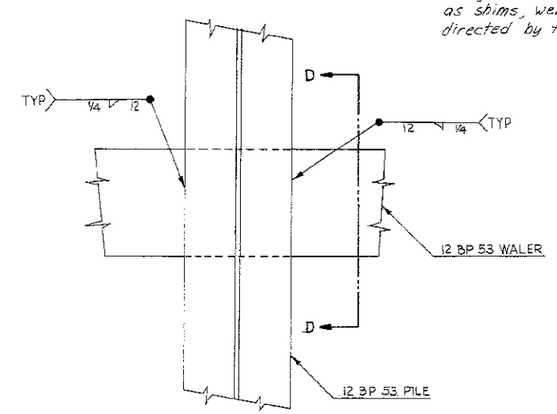

SECTION C-C
1/8 SCALE

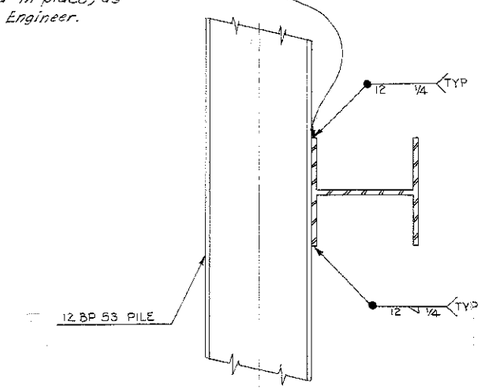

SECTION D-D
1/8 SCALE

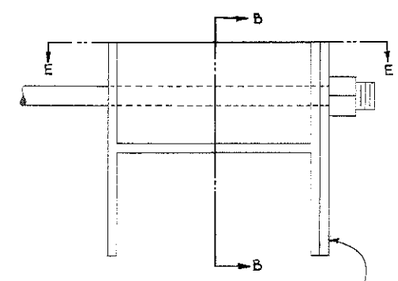

DETAIL "B"
ANCHOR PILE
1/4 SCALE

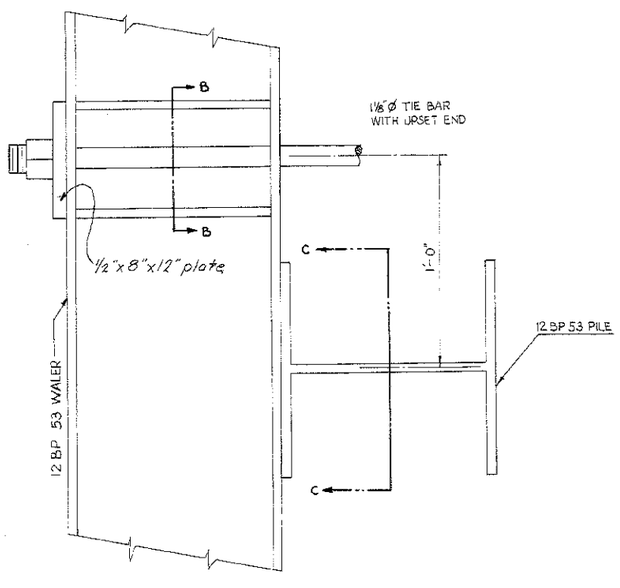

DETAIL "A"
1/4 SCALE

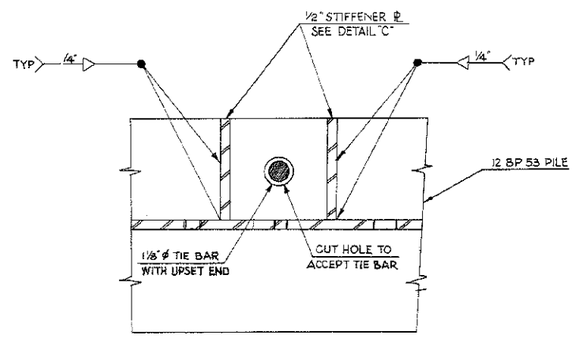

SECTION B-B
1/4 SCALE

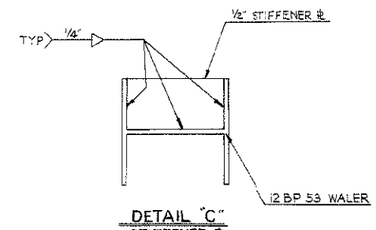

DETAIL "C"
STIFFENER PL
1/8 SCALE

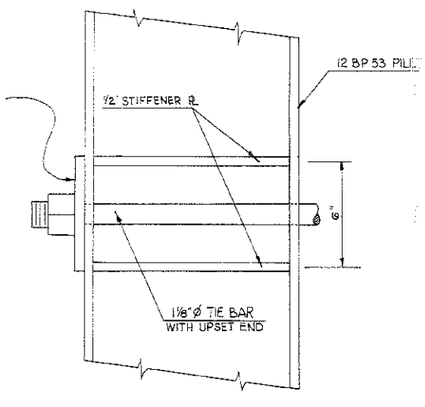

SECTION E-E
1/4 SCALE

CALCULATED
CHECKED

Structural Details

LAK-86-1.75

12
13

I:\PROJECTS\LAK86\dgn\sd012.dgn 16-APR-2002 9:42AM bblayney