PROPOSED TYPICAL SECTIONS

TYPE 404 ON 305

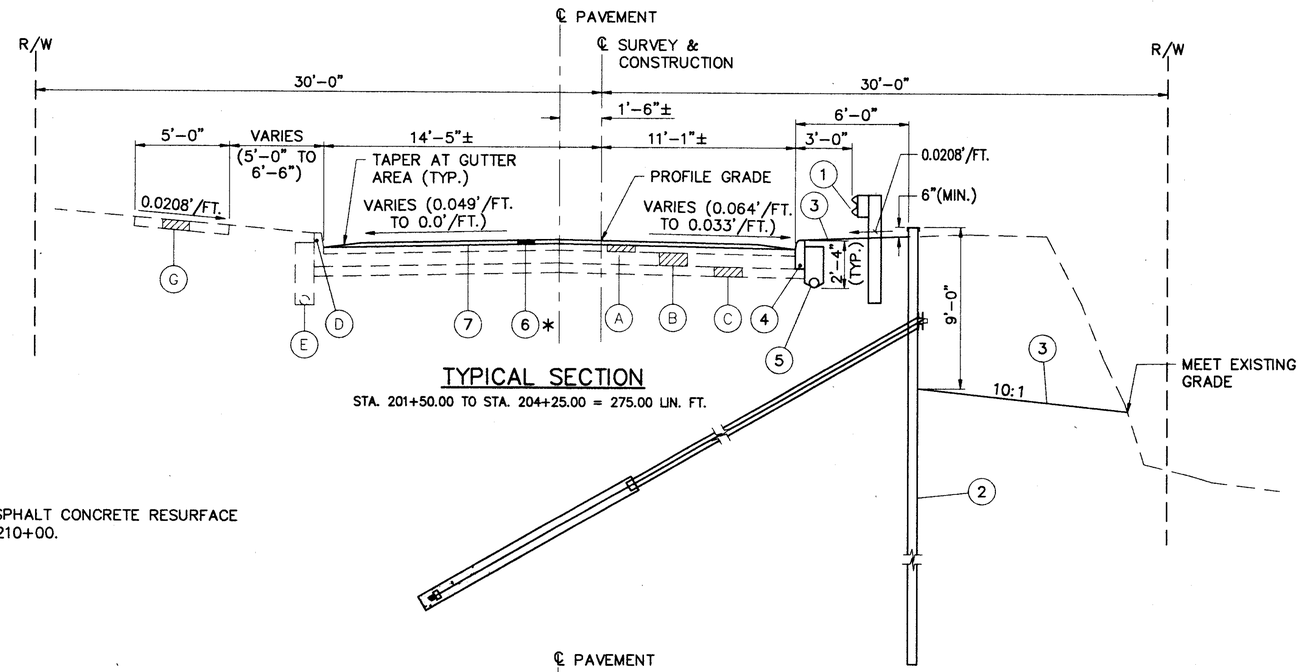

TYPICAL SECTION

STA. 201+50.00 TO STA. 204+25.00 = 275.00 LIN. FT.

* BEGIN 1 1/4" ITEM 404–ASPHALT CONCRETE RESURFACE AT STA. 201+70 TO STA. 210+00.

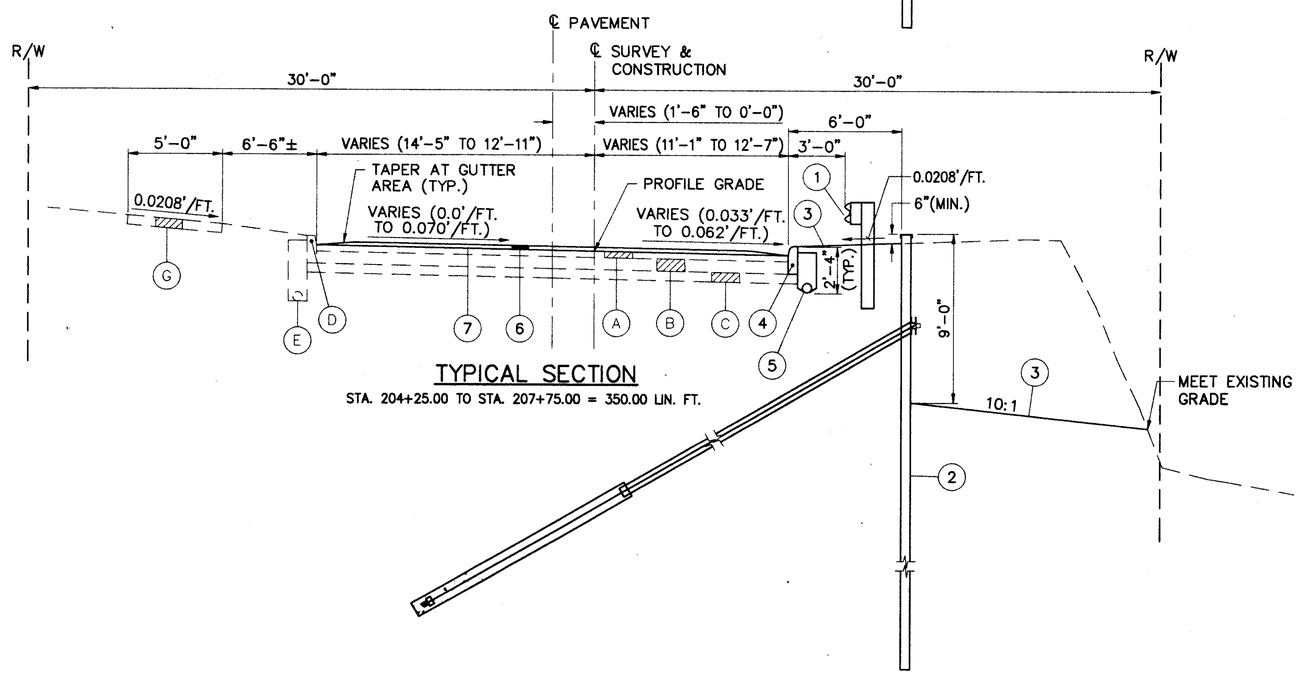

TYPICAL SECTION

STA. 204+25.00 TO STA. 207+75.00 = 350.00 LIN. FT.

LEGEND

1. ITEM 606–GUARDRAIL, TYPE 5A
2. RETAINING WALL
3. ITEM 659–SEEDING AND MULCHING
4. ITEM 609–CURB, TYPE 6
5. ITEM 605–6" SHALLOW PIPE UNDERDRAIN
6. ITEM 404–1 1/4" ASPHALT CONCRETE, AC–20
7. ITEM 407–TACK COAT

- (A) 4"± ASPHALT OVERLAY
- (B) 8"± REINFORCED CONCRETE PAVEMENT
- (C) 6"± SUBBASE
- (D) CURB, TYPE 2B
- (E) 6" SHALLOW PIPE UNDERDRAIN
- (F) GUARDRAIL
- (G) CONCRETE WALK

CALCULATED

CHECKED

PROPOSED TYPICAL SECTIONS

LAK – 84 – 5.04

DATE: 09-16-96 – TIME: 11:58 – H:\CT\93119\CAD\9311929B.DWG