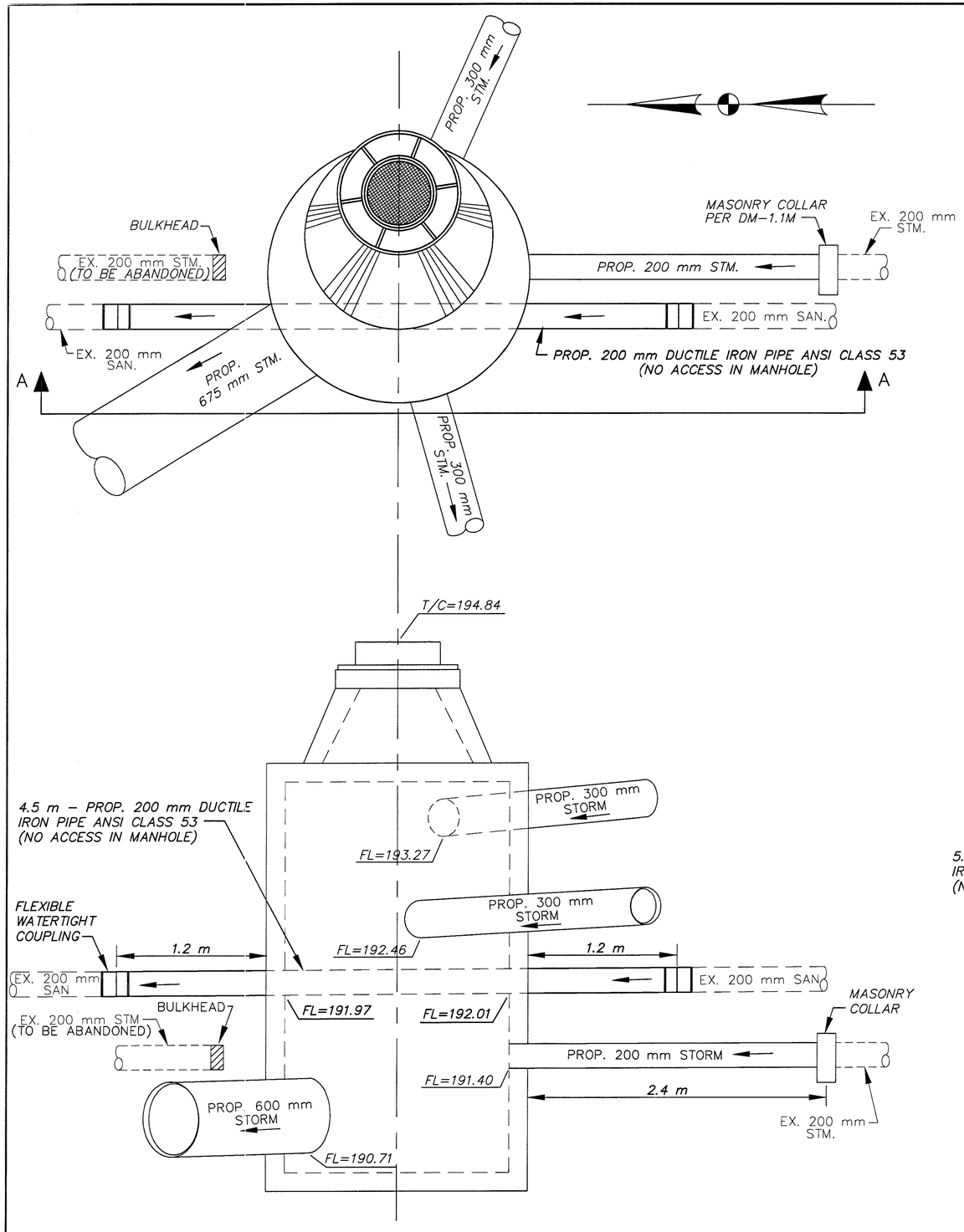

SECTION A–A
STA. 5+042.0, 11.5 m RT.

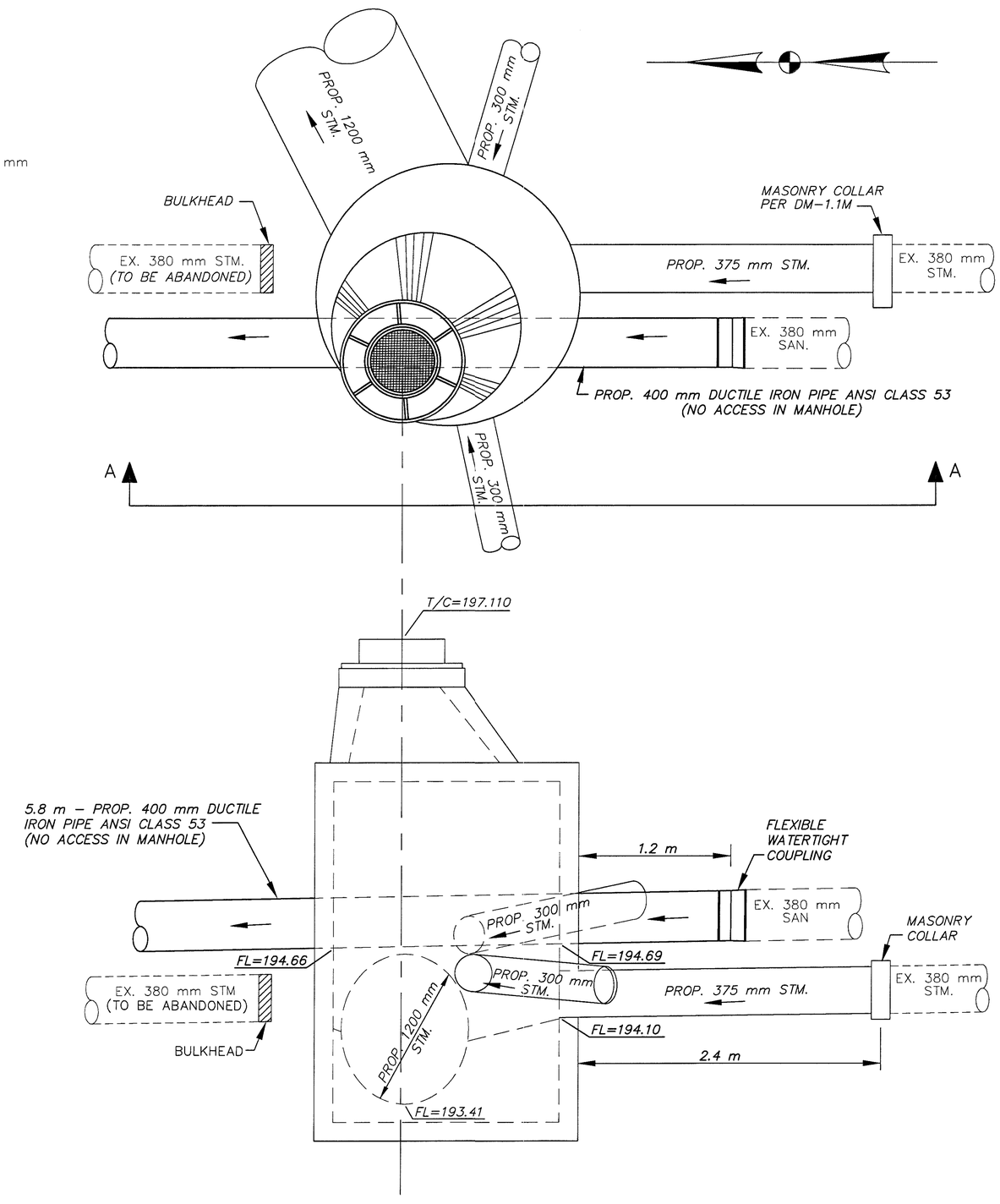

SECTION A–A
STA.5+208.0, 10.5 m RT.

HORIZONTAL SCALE IN METERS
0.4 0 0.2 0.6

CALC. BY:
CHECKED BY:

DRAINAGE DETAILS
MANHOLES NO. 3, AS PER PLAN TYPE A

LAK–640–3.444

187/214

94014–PG–187–DD\11–24–00

94–014