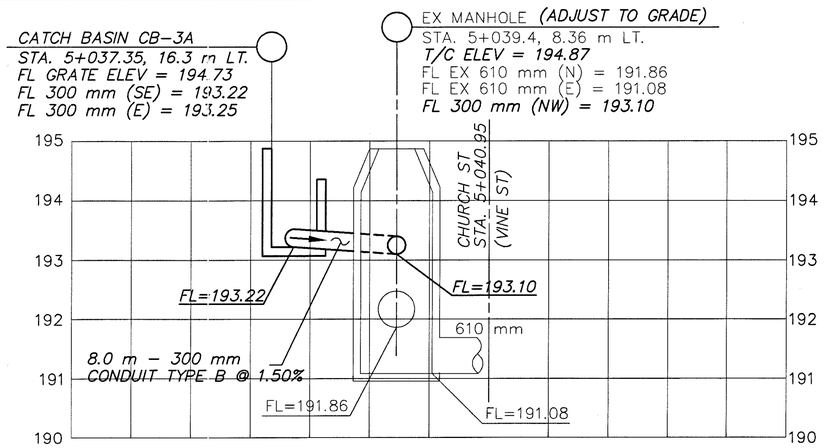

STA. 5+037.35 TO STA. 5+039.40
(SEE SHEET 90)

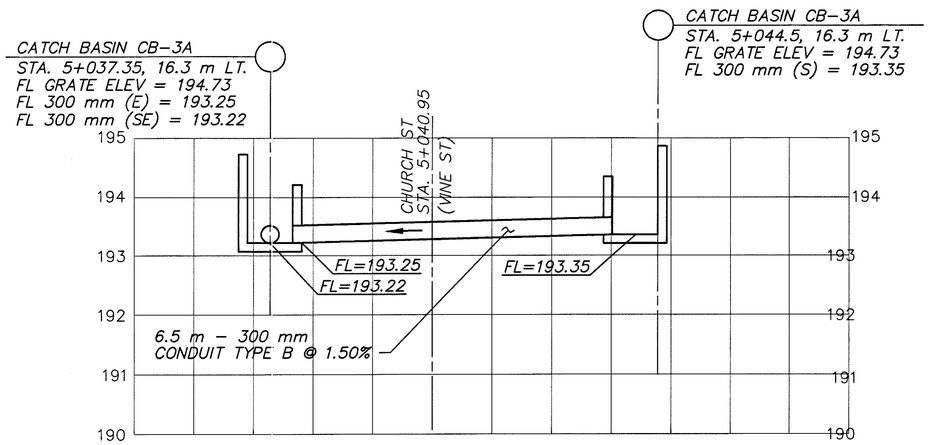

STA. 5+037.35 TO STA. 5+044.50
(SEE SHEET 90)

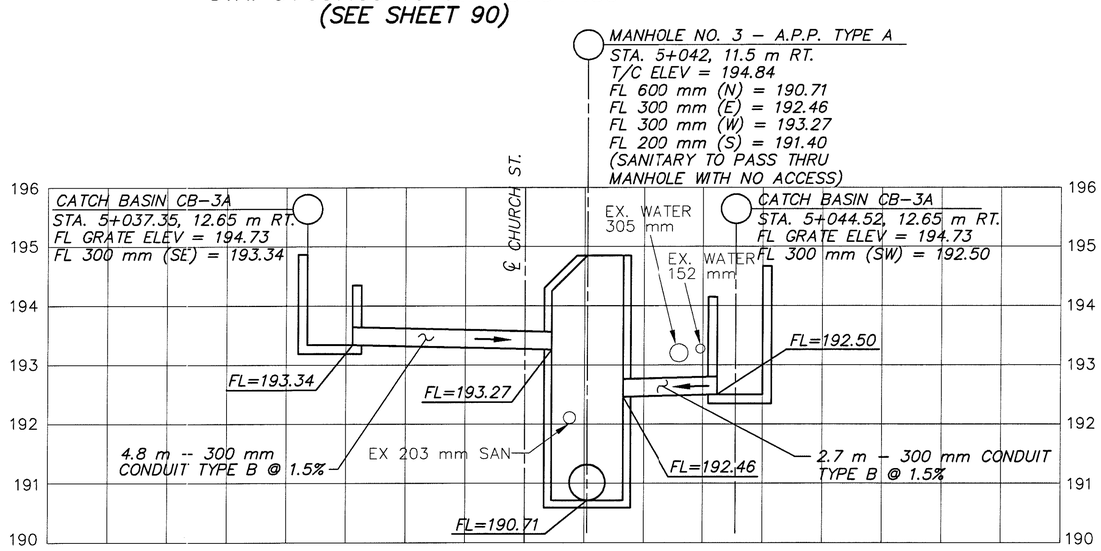

STA. 5+037.30 TO STA. 5+044.50
(SEE SHEET 90)

REFER TO SHT. 187
FOR TYPE-A MANHOLE DETAILS

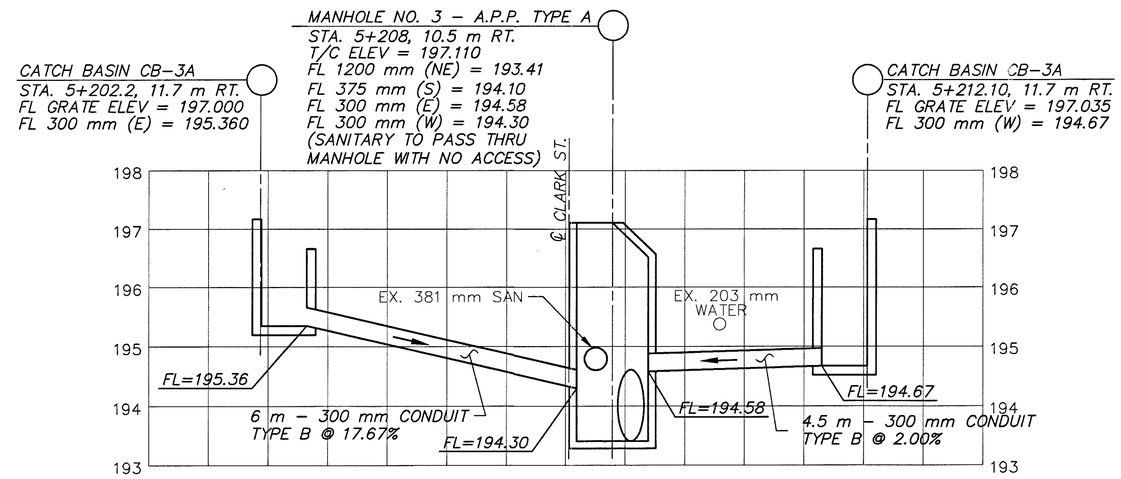

STA. 5+202.2 TO STA. 5+212.1
(SEE SHEET 94)

REFER TO SHT. 187
FOR TYPE-A MANHOLE DETAILS

HORIZONTAL
SCALE IN METERS

CALC. BY:
CHECKED BY:

TRANSVERSE SEWER PROFILES

LAK-640-3.444

183
214

94014-PG-183-DFD\11-24-00

94-014