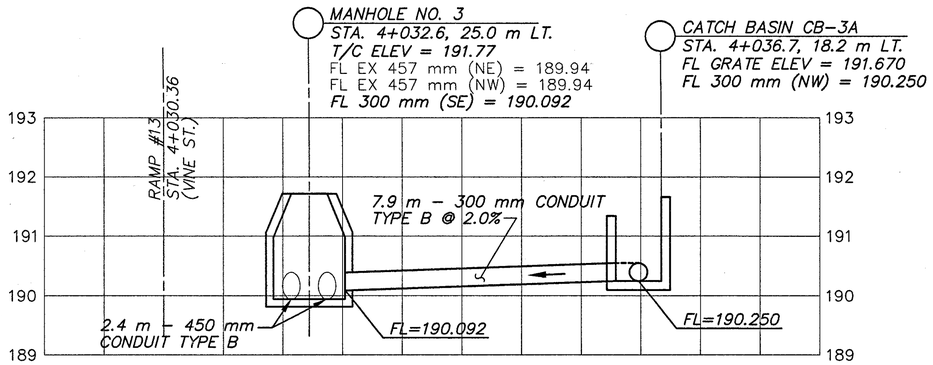

STA. 4+032.60 TO STA. 4+036.70
(SEE SHEET 75)

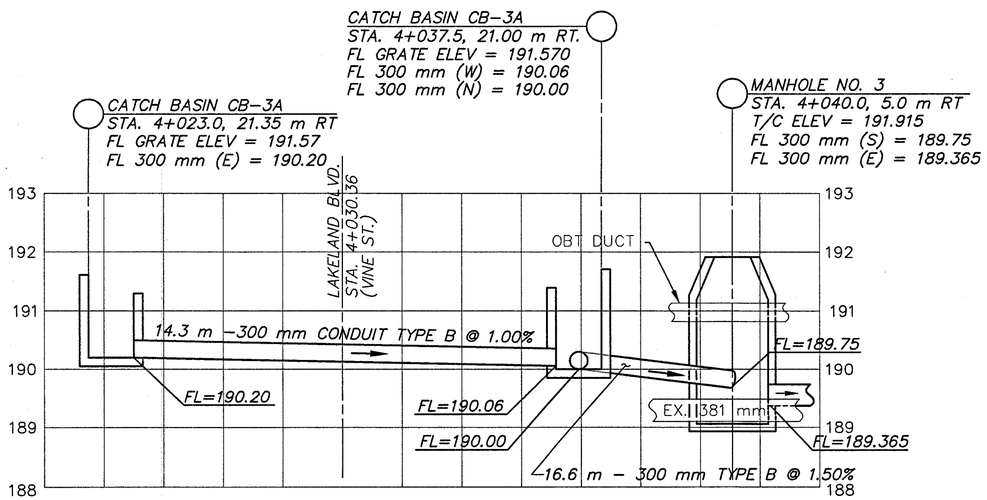

STA. 4+023.0 STA. 4+040.0
(SEE SHEET 75)

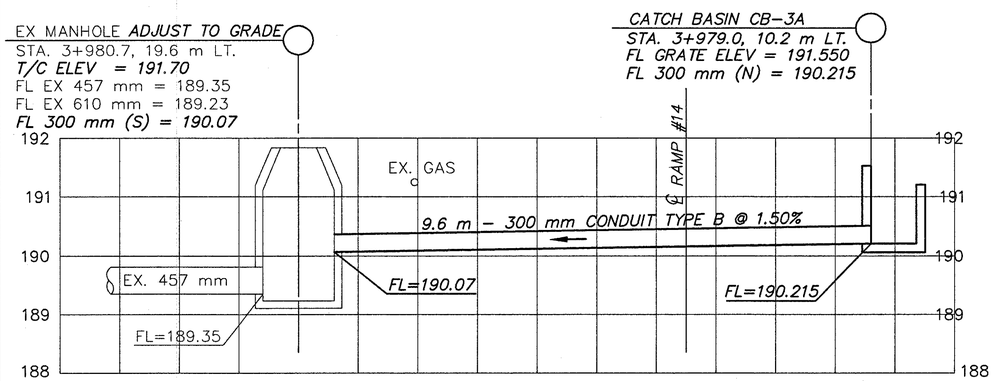

STA. 3+979.0 TO STA. 3+980.7
(SEE SHEET 74)

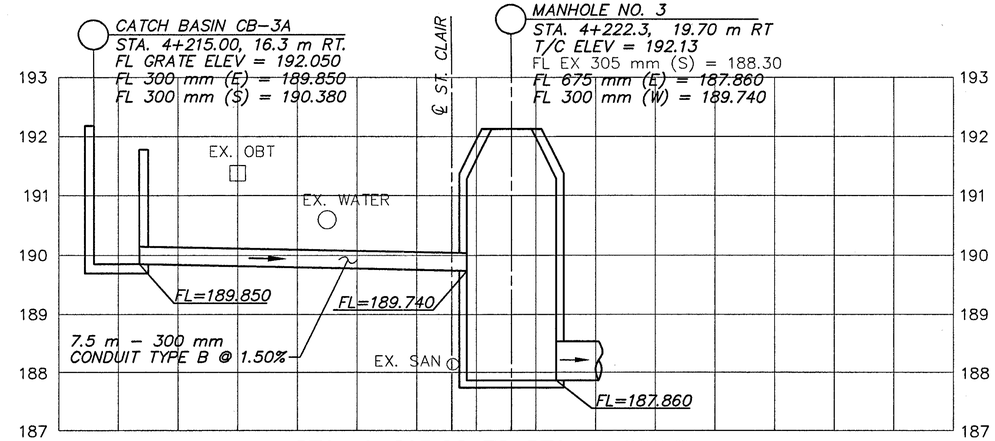

STA. 4+215.00 TO STA. 4+222.3
(SEE SHEET 78)

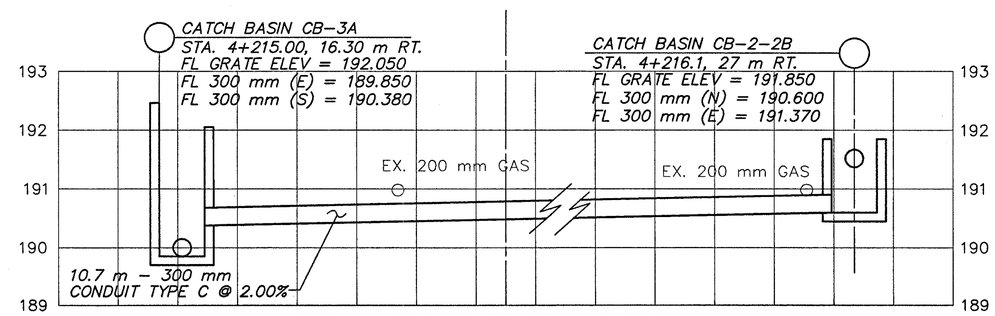

STA. 4+215.00 TO STA. 4+216.1
(SEE SHEET 78)

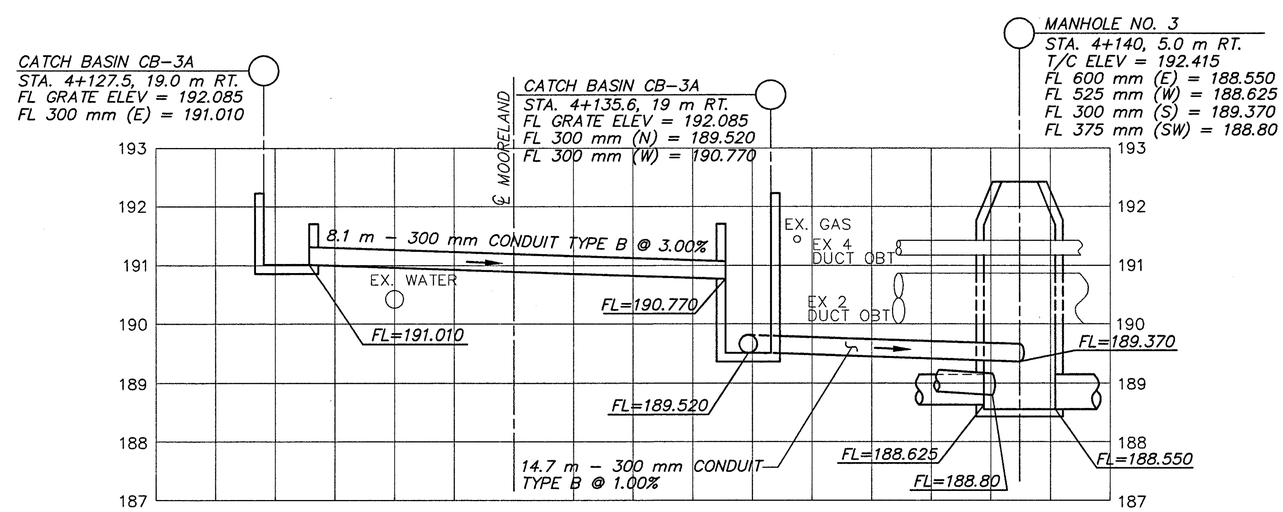

STA. 4+127.5 TO STA. 4+140.0
(SEE SHEET 77)

N

HORIZONTAL SCALE IN METERS

CALC. BY:

CHECKED BY:

TRANSVERSE SEWER PROFILES

LAK-640-3.444

94014-PG-181-DFB\11-24-00

94-014