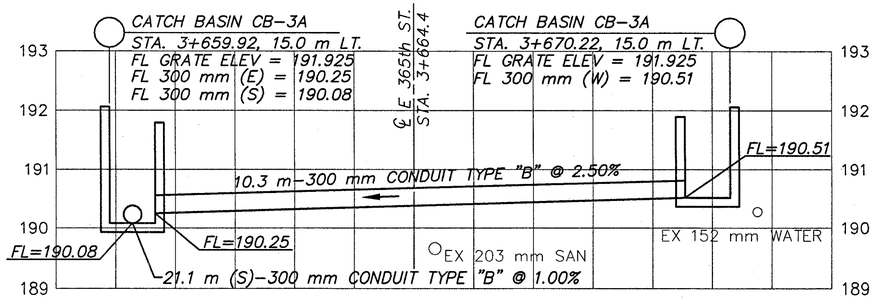


STA. 3+659.40 TO STA. 3+669.70
(SEE SHEET 70)

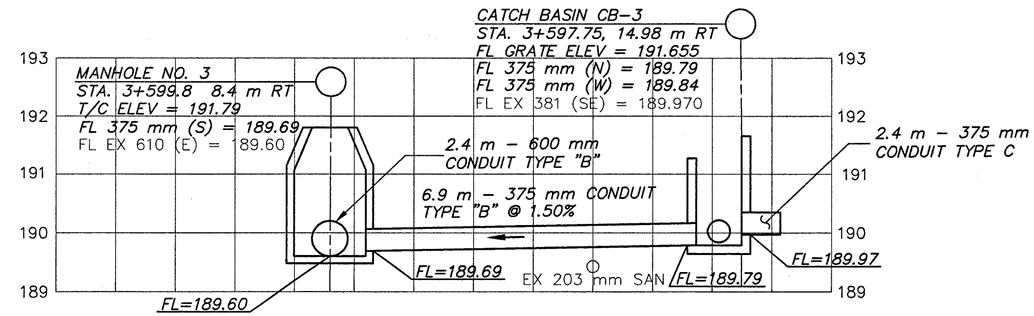


STA. 3+597.75 TO STA. 3+599.8
(SEE SHEET 69)

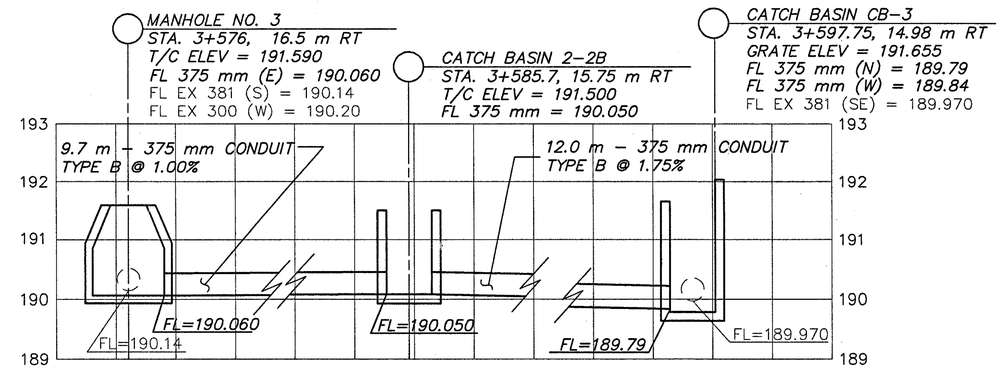


STA. 3+576 TO STA. 3+597.75
(SEE SHEET 69)

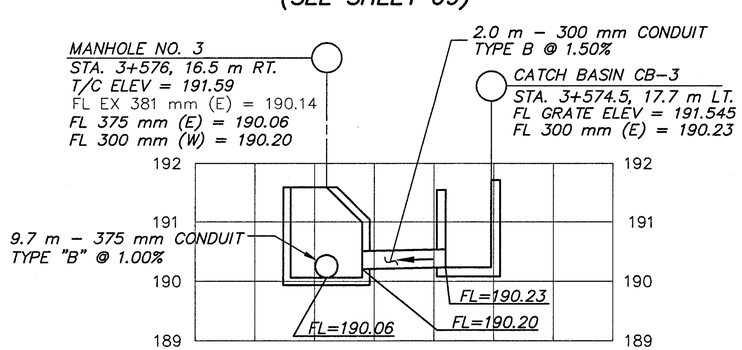


STA. 3+574.5 TO STA. 3+576
(SEE SHEET 69)

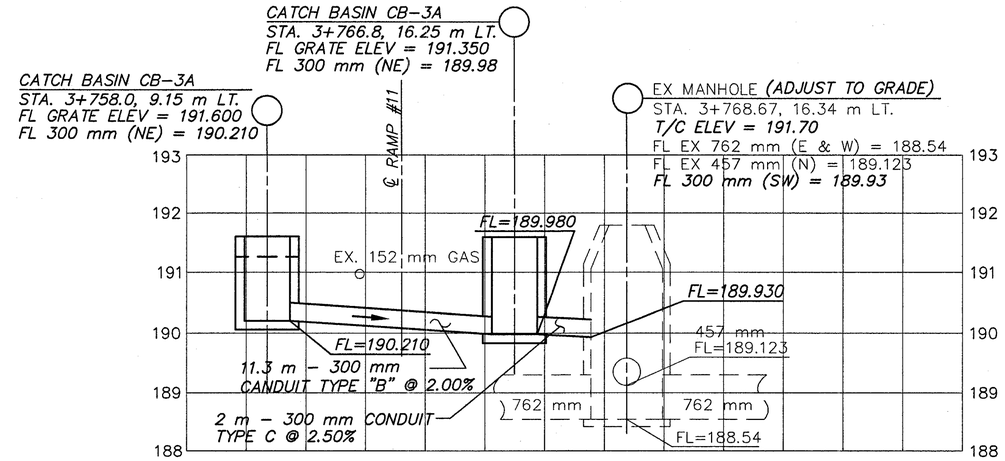


STA. 3+758.0 TO STA. 3+768.67
(SEE SHEET 71)

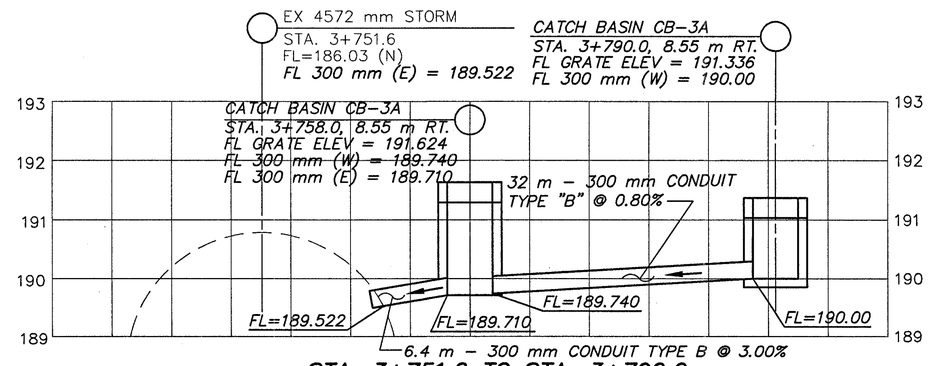


STA. 3+751.6 TO STA. 3+790.0
(SEE SHEET 71)

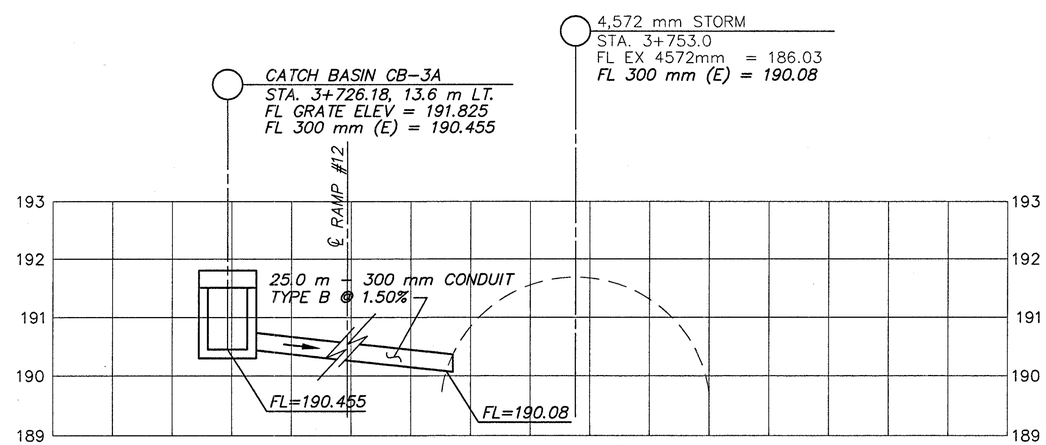


STA. 3+726.17 TO STA. 3+758.0
(SEE SHEET 71)

HORIZONTAL SCALE IN METERS

CALC. BY:
CHECKED BY:

TRANSVERSE SEWER PROFILES

LAK-640-3.444

180A
214

94014-PG-180A-DFA\11-24-00

94-014