MICROFILMED
FEB 12 1985

FED. RD. DIVISION	STATE	PROJECT	
2	OHIO		

LAKE COUNTY
LAK-615-3.26

REFERENCE shall be made to Standard Drawings:
AS-1-67 revised 6-12-69
BR-2-67 revised 1-1-71
SD-1-69 dated 6-12-69, and to
Supplemental Specifications:
808 dated 11-14-69
836 dated 1-1-71

DESIGN SPECIFICATIONS: This structure conforms to "Standard Specifications for Highway Bridges" adopted by the American Association of State Highway Officials, 1965, including the Ohio "Supplement" to these specifications.

DESIGN DATA:
Design Loading - HS20-44
Concrete Class C - unit stress 1200 p.s.i. for superstructure
unit stress 1333 p.s.i. for substructure
Structural Steel - ASTM A36 - unit stress 20,000 p.s.i.
Reinforcing Steel - ASTM A615, A616, A617, - unit stress 20,000 psi.

Spiral reinforcement may be plain bars, A306, A499, A82 or A615.

PROCEDURE - REAR ABUTMENT: Before the backwall is constructed the embankment shall be constructed up to the level of the subgrade with a 1:1 slope from the bridge seat to the subgrade, for a minimum distance of 200 feet back of the abutment ~~and piling driven~~.

PROCEDURE - FORWARD ABUTMENT: The embankment shall be constructed to the level of the subgrade for a minimum distance of 200 feet back of the abutments. Excavation shall then be made for the abutment and piling driven.

PILES shall be driven to a minimum bearing capacity as follows: Rear Abutment - 42 tons per pile.
S.E. Wingwall - 40 tons per pile.
Piers 1-4 - 47 tons per pile.
Piers 5&6 46 tons per pile.
Forward Abutment - 45 tons per pile.

MACHINE FINISH: The concrete bridge deck shall be finished by the use of a finishing machine.

UTILITY LINES: All expense involved in relocating (installing) the affected utility lines shall be borne by the Owner(s). The Contractor and Owner(s) are requested to cooperate by arranging their work in such a manner that incovenience to either would be held to a minimum.

CONSTRUCTION CLEARANCE of 20'-0" vertically above the top of the railroad rails and 8'-0" horizontally from the center of tracks shall be maintained at all times along the N&W Railway. A Construction Clearance of 20'-0" vertically above the top of the railroad rails and 8'-0" horizontally from the center of tracks shall be maintained at all times along the P-C Railroad.

RAILROAD AERIAL LINES will be relocated by the Railroad. The Contractor shall use all precautions necessary to see that the lines are not disturbed during the construction stage and shall cooperate with the Railroad in the relocation of these lines. The cost of the relocation shall be included in the railroad force account work.

NON-STRESS carrying welds are indicated thus:

WELDED ATTACHMENTS: No attachments shall be made by field welding to the top flange plates of the plate girders within a distance of 0.10 of the span length on either side of the interior supports. Welding for attachments to the top flanges at other parts of the spans shall be kept at least 2" from edge of flange.

Stainless steel fasteners shall be properly passivated to remove surface impurities and shall be furnished with a lustrous finish.

ESTIMATED QUANTITIES (Bridge No. LAK-615-0402)

ITEM	TOTAL	UNIT	DESCRIPTION	SUPER-STRUCTURE	REAR ABUT.	FWD. ABUT.	PIERS 1,2,3&4	PIERS 5&6	GEN.		
503	Lump	Sum	Cofferdams, cribs and sheeting						Lump		
503	1639	Cu.yd.	Unclassified excavation		538	225	627	249			
504	1480	Sq.ft.	Steel sheet piling left in place (Minimum section modulus of 30.2 in.^{3}								
			per foot of wall)		1480						
505	Lump	Sum	Test pile						Lump		
518	90	Lin.ft.	8" non-perforated corrugated metal pipe including specials, 707.01		90						
507	7,745	Lin.ft.	12" Cast-in-place reinforced concrete piles		2625	840	3000	1280			
511	420	Cu.Yd.	Class C concrete, abutment walls		420						
509	642,718	Lb.	Reinforcing steel	432,091	74,722	10,787	88,810	36,308			
511	195	Cu.Yd.	Class C concrete, pier columns				195				
511	1602	Cu.Yd.	Class C concrete, superstructure	1602							
511	229	Cu.Yd.	Class C concrete, pier walls					229			
511	115	Cu.Yd.	Class C concrete, abutments above footings			115					
511	757	Cu.Yd.	Class C concrete, footings		251	75	355	76			
512	10	Sq.Yd.	Type B waterproofing		10						
512	43	Lin.ft.	Premolded sealing strip		32	11					
513	1,284,500	Lb.	Structural steel	1,284,500							
516	145	Sq.ft.	1" preformed expansion joint filler		114	31					
517	1427.30	Lin.ft.	Railing (concrete parapet with double pipe rail)	1369.98	15.50	41.82					
518	235	Cu.Yd.	Porous backfill		190	45					
518	107	Lin.ft.	8" perforated corrugated metal pipe incl. specials, 707.01		107						
518	113	Lin.ft.	6" perforated, helical corrugated metal pipe including specials, 707.01		38	75					
518	42	Lin.ft.	6" non-perforated helical corrugated metal pipe, 707.01		2	40					
518	38	Each	Scuppers including supports	38							
601	564	Sq.Yd.	Crushed aggregate slope protection			564					
808	1602	Units	Chemical Admixture for Concrete Type A, B or D	1602							
516	12	Sq.ft.	1/2" preformed expansion joint filler			12					
607	113	Lin.ft.	Fence, Type CL (Special, 10' high steel chain link fence)						113		
514	1,284,500	Lb.	Field painting of structural steel	1,284,500							
518	Lump	Sum	Trough horizontal conductors, including specials	Lump							
518	100	Lin.Ft.	6" std. pipe downspout, alloy steel (707.11) or		50			50			
			hot dipped galvanized steel, including specials								
625			See Sheet 75 For Lighting Summary								

Note: Standard galvanized "two way rail clamps" shall be used at all intermediate posts to fasten bottom railing to intermediate posts. Standard galvanized "one way rail clamps" shall be used to fasten top rail, brace rail and bottom rail to terminal posts.
Chain link fabric shall be fastened to the galvanized 1 5/8" O.D. pipe rails and intermediate post with bands or tie wires as per item 607.08. See Std. Construction Dwg. F-1.
All posts, rails and accessories shall be included with lineal feet of fence, Item 607, for payment.

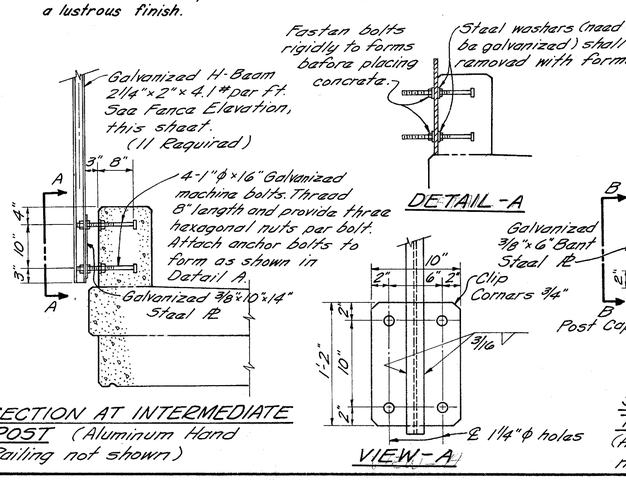

SECTION AT INTERMEDIATE POST (Aluminum Hand Railing not shown)

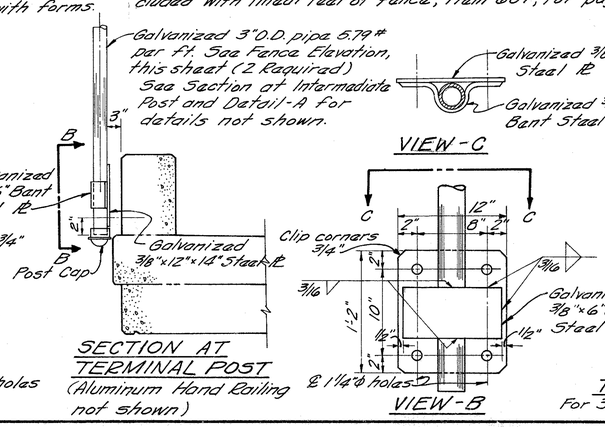

SECTION AT TERMINAL POST (Aluminum Hand Railing not shown)

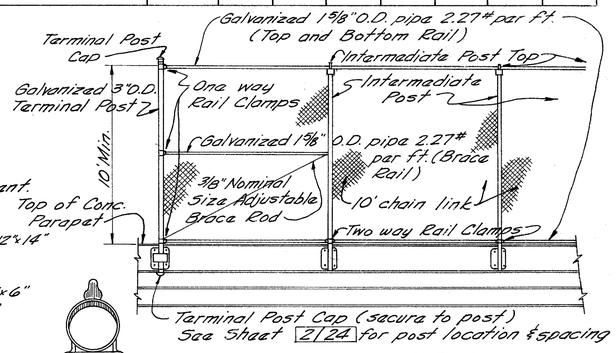

FENCE ELEVATION (Aluminum Hand Railing not shown)

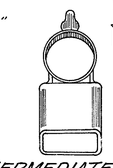

INTERMEDIATE POST TOP
For 1 5/8" O.D. Top Rail and 2 1/4" x 2" H-Beam Post (11 Required)

TERMINAL POST CAP
For 3" O.D. Terminal Post (4 Required)

BURGESS & NIPLE LIMITED — CONSULTING ENGINEERS
COLUMBUS, OHIO

4 | 24

GENERAL NOTES & ESTIMATED QUANTITIES
BRIDGE NO. LAK-615-0402
OVER
N&W RAILWAY & P-C RAILROAD
STA. 47+28.12
54+16.22
LAKE COUNTY

DESIGNED	DRAWN	TRACED	CHECKED	REVIEWED	DATE	REVISED
DLW	DLW		KEB 8-2-68	WER	4-14-69	

ALL-STATE BLUEPRINT CO.'S., O. 41028

DEC 11 1970
JUN 26 1970