FED. RD. DIVISION	STATE	PROJECT	
2	OHIO		

127/181

LAKE COUNTY
LAK-615-3.26

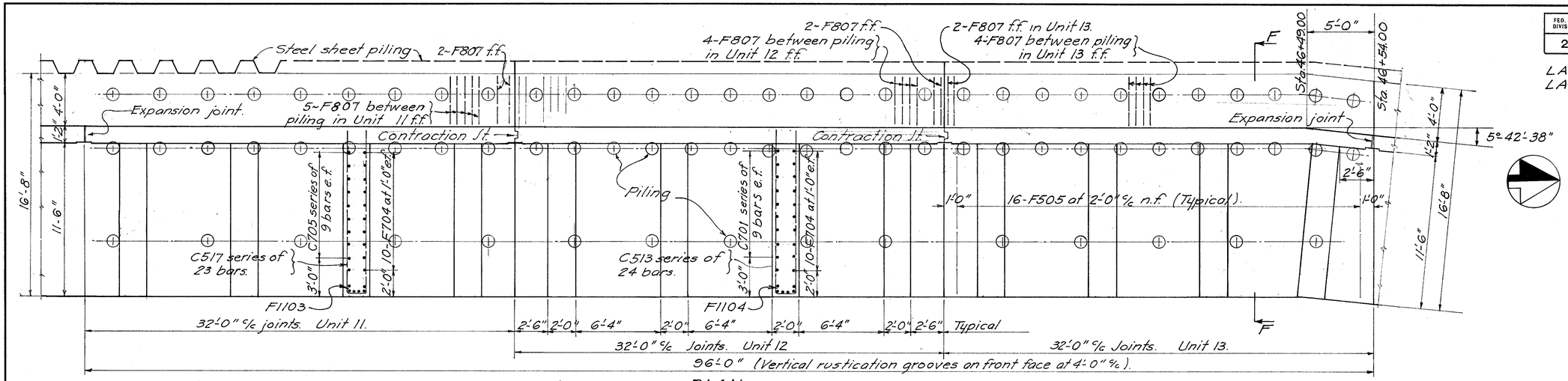

PLAN

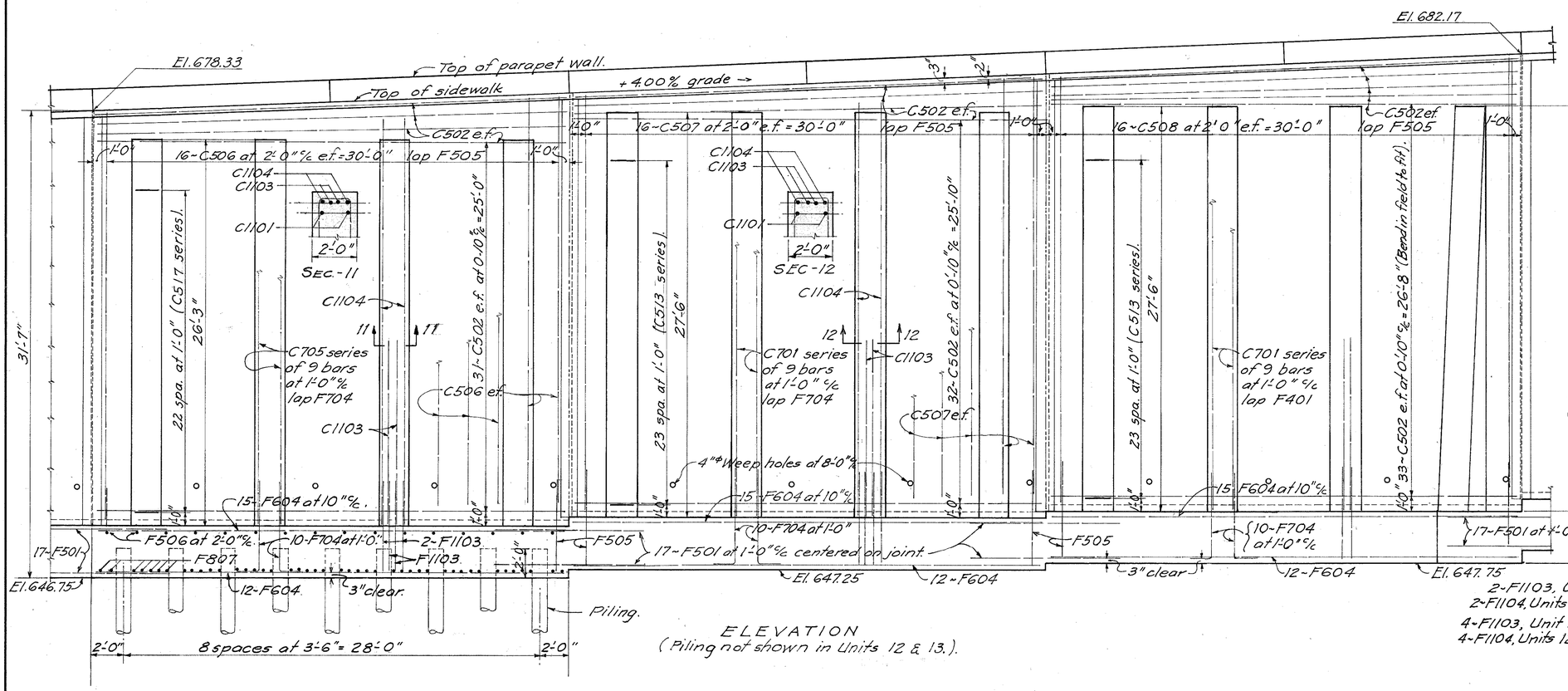

ELEVATION
(Piling not shown in Units 12 & 13.)

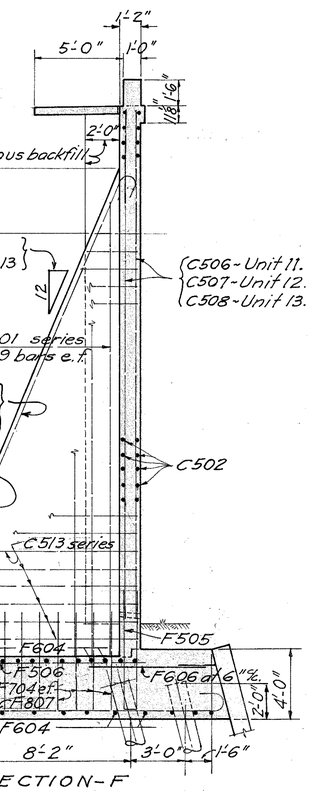

SECTION-F

LEGEND:-
e.f. = each face.
n.f. = near face.
f.f. = far face.

BURGESS & NIPLE, LIMITED — CONSULTING ENGINEERS
COLUMBUS, OHIO

6/8

RETAINING WALL "B"
UNITS 11, 12 AND 13.

LAKE COUNTY

STA. 42+60.00
STA. 47+02.79

DESIGNED	DRAWN	TRACED	CHECKED	REVIEWED DATE	REVISED
EW	K.E.D.	K.E.D.	ABC	WER 11-19-68	

DEC 1 1 1970 JUN 2 8 1970

ALL-STATE BLUEPRINT CO'S., O. 41029