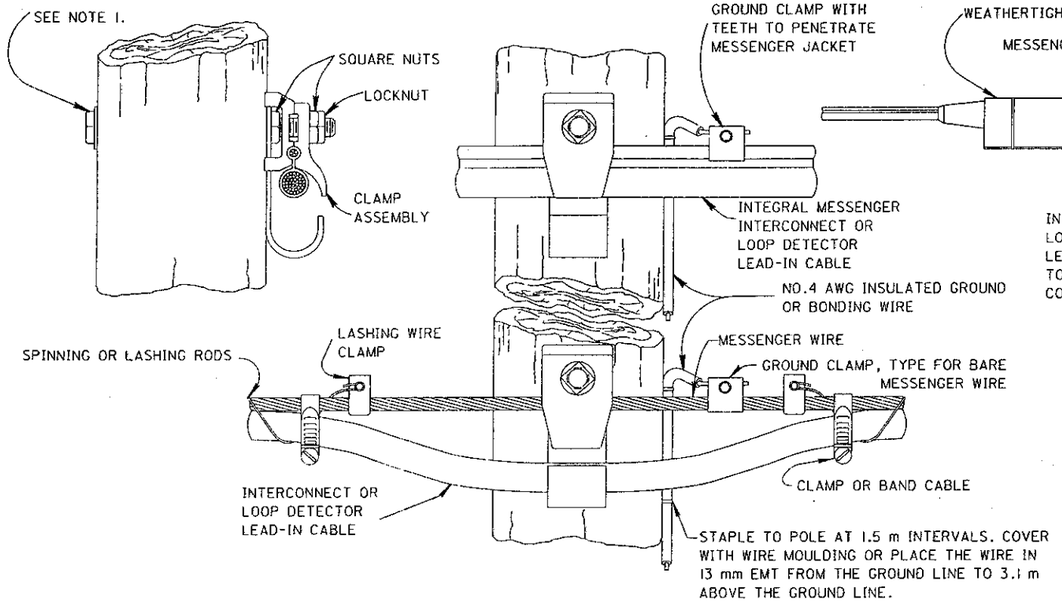

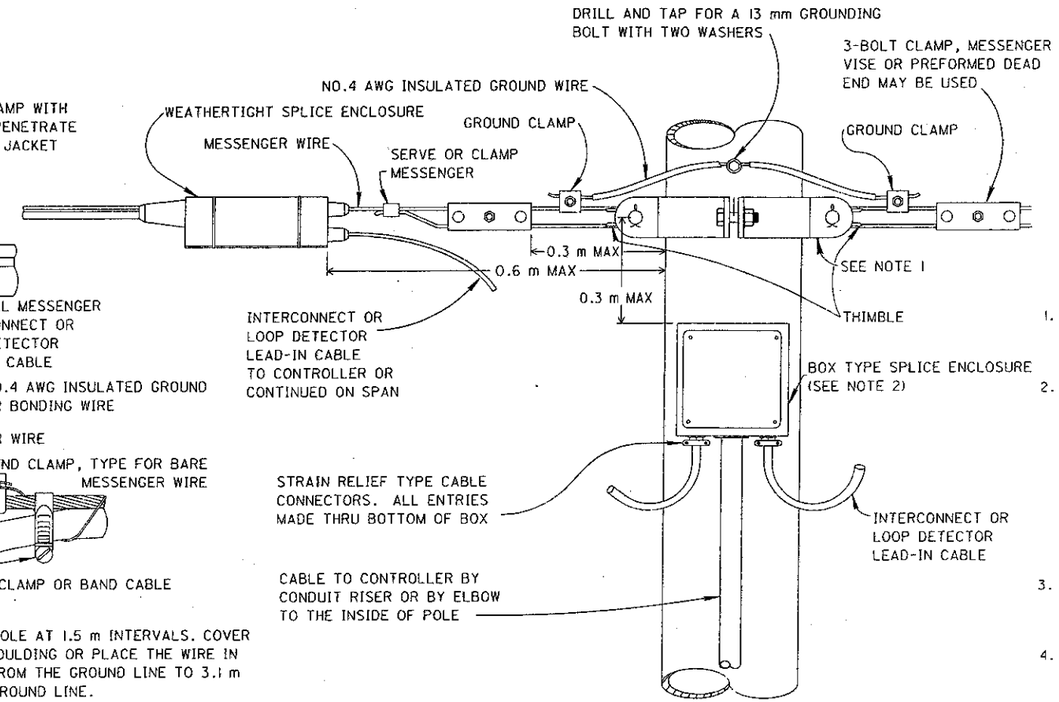

INTERCONNECT AND LOOP DETECTOR LEAD-IN ATTACHMENT DETAIL

NOTES

1. MESSENGER WIRE POLE ATTACHMENT SHALL BE BY A POLE CLAMP ON STEEL POLES AND BY A 16 mm THRU-BOLT (OR THIMBLE-EYE BOLT) WITH WASHERS ON WOOD POLES.
2. THE POLE MOUNTED TYPE SPLICE ENCLOSURE MAY BE USED AS AN ALTERNATIVE SPLICE METHOD UNLESS OTHERWISE SPECIFIED IN THE PLANS. POLE ATTACHMENT SHALL BE BY MEANS OF PASSIVATED STAINLESS STEEL BANDING OR TAPPED SCREWS ON STEEL POLES AND LAG SCREWS ON WOOD POLES. THE BOX SHALL BE GASKETED AND WEATHERTIGHT, AND HOT DIPPED GALVANIZED IF CONSTRUCTED OF STEEL. MINIMUM BOX REQUIREMENTS SHALL BE 200 mm X 200 mm X 100 mm WITH 12 TERMINAL CONNECTIONS (20 AMP.)
3. THE INTERCONNECT OR LOOP DETECTOR LEAD-IN CABLE SHALL HAVE A SAG BETWEEN 3% AND 5% OR MATCH EXISTING UTILITY LINES.
4. THE INTERCONNECT OR LOOP DETECTOR LEAD-IN MESSENGER WIRE SHALL BE GROUNDED AT THE FIRST AND LAST POLES IN A CABLE RUN AND AT INTERVALS NOT TO EXCEED 366 METERS. WHEN ATTACHED TO WOOD POLES, THE MESSENGER WIRE SHALL BE GROUNDED BY BONDING TO AN EXISTING GROUND WIRE OR CONNECTION TO A GROUND ROD. THE MESSENGER WIRE SHALL BE BONDED TO GROUNDED STEEL POLES BY USE OF A 13 mm BOLT, DRILLED AND TAPPED INTO THE POLE.
5. THE MINIMUM 3-BOLT SIZE CLAMP SHALL BE 152 mm LONG WITH 13 mm DIAMETER BOLTS. PREFORMED GUY GRIPS SHALL NOT BE USED TO ATTACH THE MESSENGER WIRE TO THE SIGNAL POLES. THEIR USE IS LIMITED TO BULLRING ATTACHMENTS.
6. THE ALTERNATE MESSENGER WIRE ATTACHMENT SHALL ONLY BE ALLOWED ON ROUND, TAPERED STEEL STRAIN POLES.

DOWN GUY ASSEMBLY

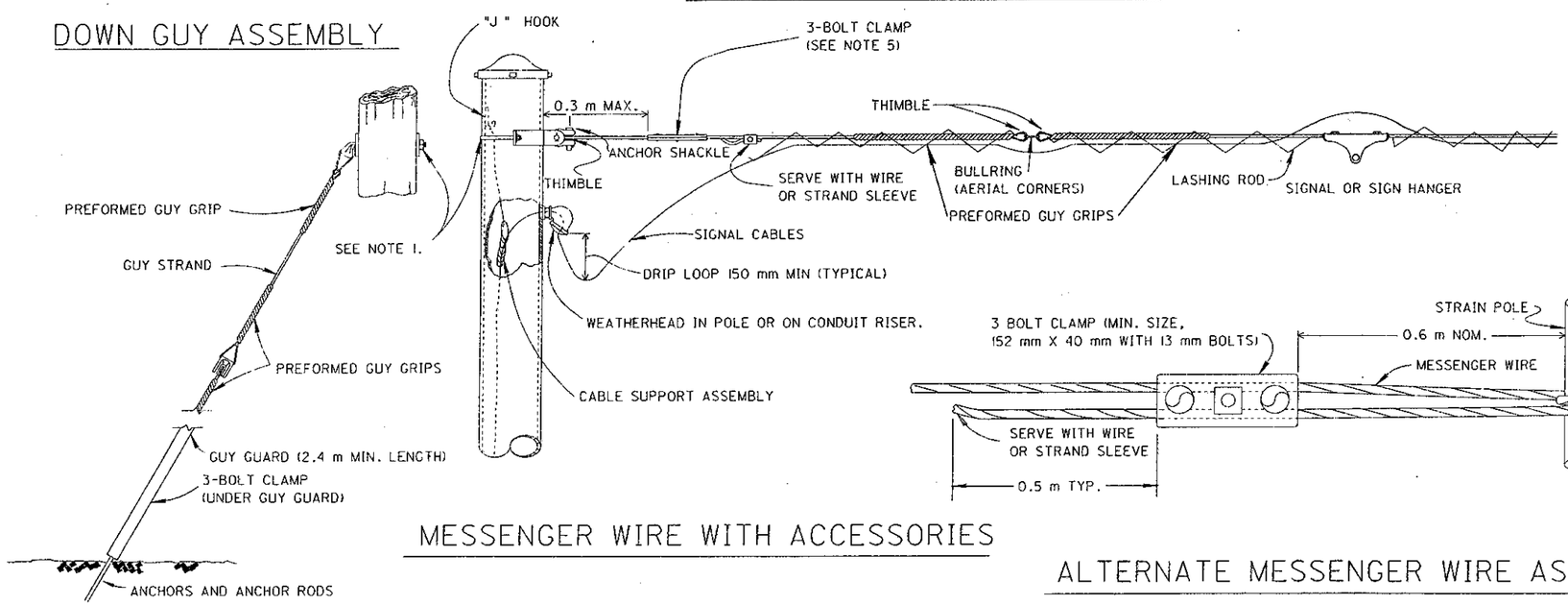

MESSENGER WIRE WITH ACCESSORIES

ALTERNATE MESSENGER WIRE ASSEMBLY

METRIC

BUREAU OF DESIGN SERVICES
DIVISION OF HIGHWAYS
OHIO DEPARTMENT OF TRANSPORTATION

TRAFFIC CONTROL	DATE 11/24/93
MESSENGER WIRE DETAILS	
STANDARD CONSTRUCTION DRAWING TC-84.20M	
APPROVED Guy Kiesgen ENGR. OF DESIGN SERVICES	

WCC