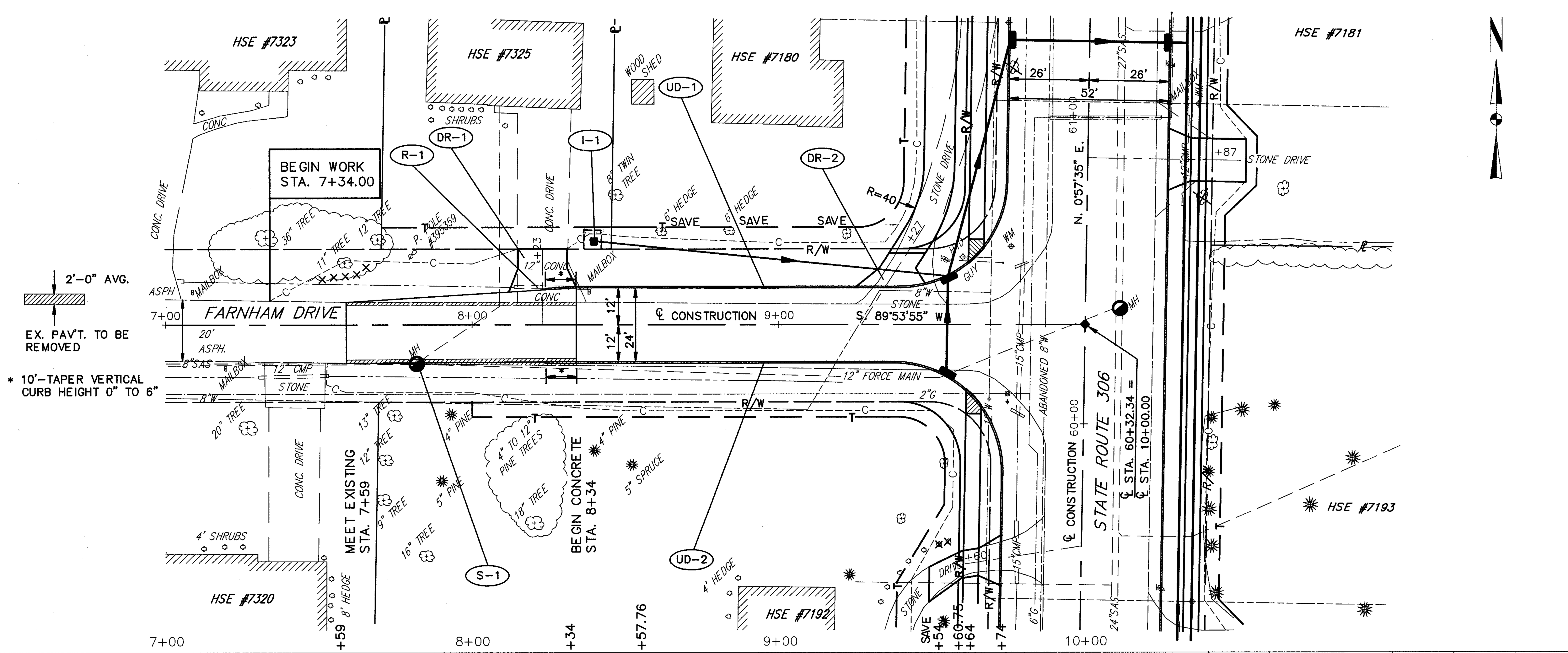

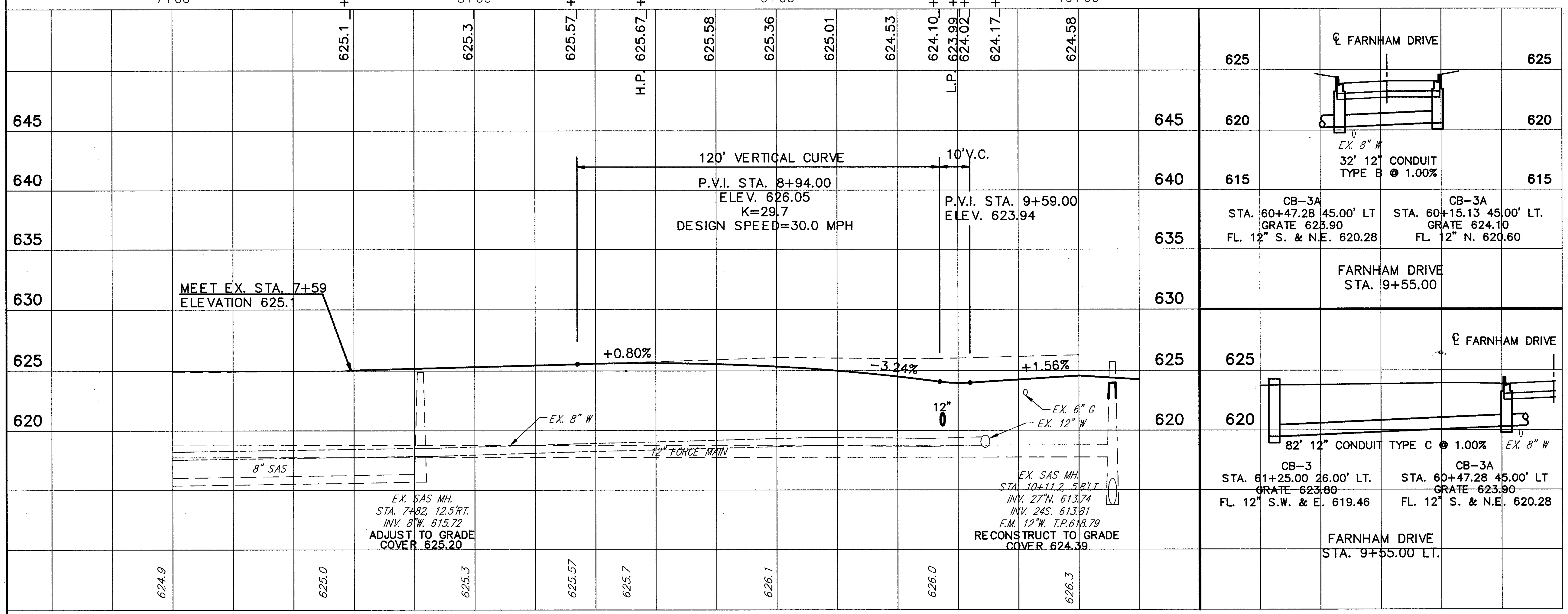

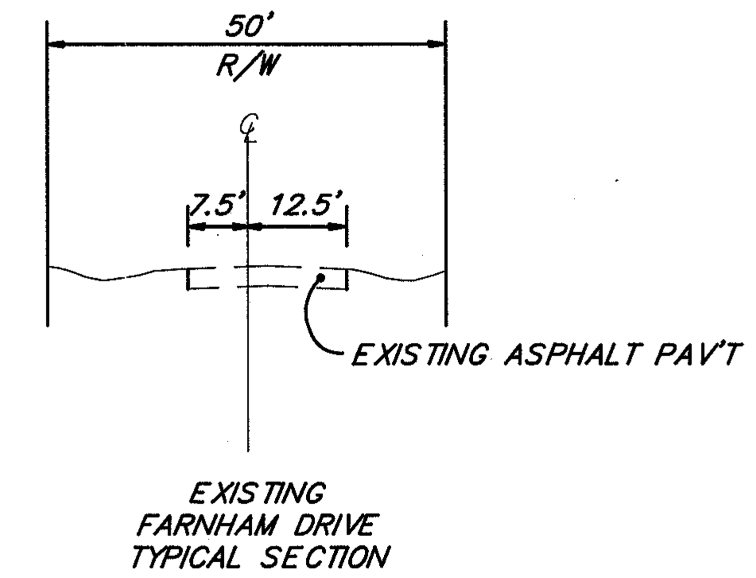

FOR TYPICAL SECTIONS SEE SHEET 7,10
FOR CROSS SECTIONS SEE SHEET 233-234
FOR MAINLINE PLAN & PROFILE SEE SHEET 97
FOR INTERSECTION DETAILS SEE SHEET 306
FOR SIGNING PLAN SEE SHEET 363-365
FOR PAVEMENT MARKING DETAILS SEE SHEET 352-353
FOR UNDERDRAIN QUANTITIES SEE SHEET 52-55
FOR DRIVEWAY PROFILES SEE SHEET 296
FOR DRIVEWAY DETAILS SEE SHEET 333-334
FOR CURB DETAILS SEE SHEET 332
FOR I-1 INLET QUANTITIES SEE SHEET 82

ROADWAY

REF.	LOCATION	202 PIPE REMOVED (24" & UNDER) L.F.	
R-1	STA. 8+14.00 TO STA. 8+38.00, 18' LT.	24	
	TOTALS	24	

DRAINAGE & SANITARY

REF.	LOCATION	604 MANHOLE SANITARY ADJUSTED TO GRADE AS PER PLAN (E.A.)	TOTALS
S-1	STA. 7+82.00' 12.50, RT.	1	1