CALC. BY LME DATE 4/90 CHKD. BY DJW DATE 4/90	LAK 306 − 7.12	OHIO FHWA REGION 5	114 452

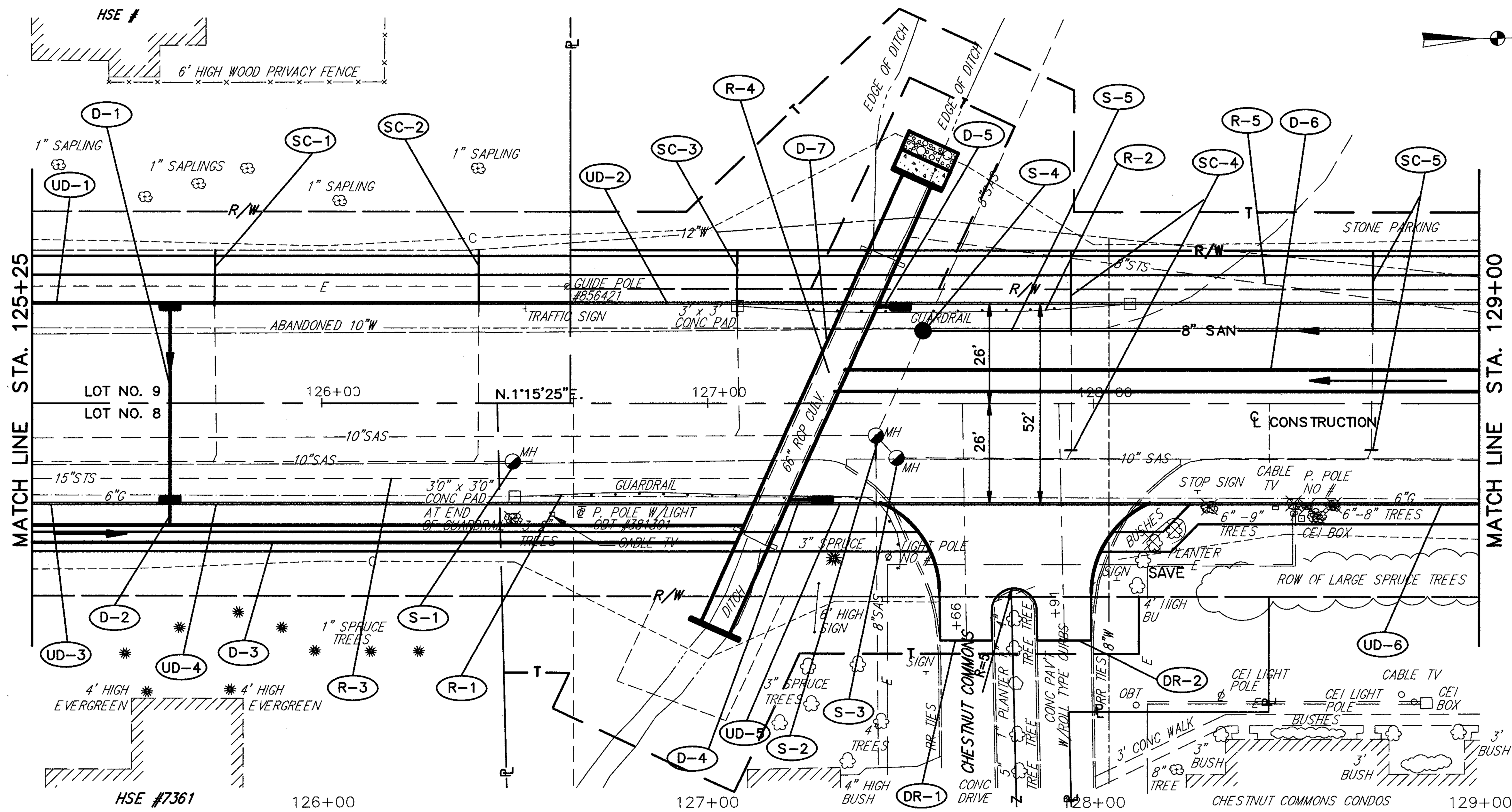

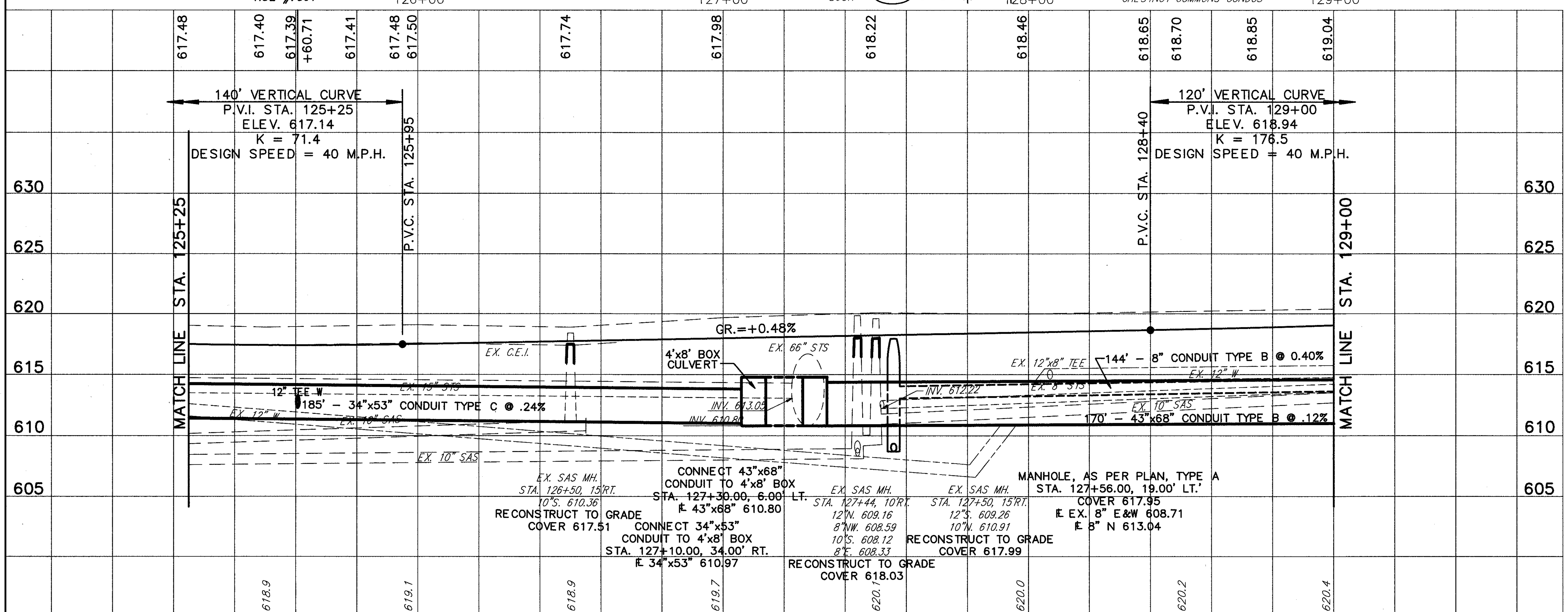

FOR TYPICAL SECTIONS SEE SHEET 6
FOR CROSS SECTIONS SEE SHEET 204-207
FOR SIGNING PLAN SEE SHEET 363-365
FOR PAVEMENT MARKING DETAILS SEE SHEET 352-353
FOR UNDERDRAIN QUANTITIES SEE SHEET 52-55
FOR CATCH BASIN DETAILS SEE SHEET 323
FOR DRIVEWAY DETAILS SEE SHEET 333-334
FOR DRIVEWAY PROFILES SEE SHEET 287
FOR STORM SEWER CONNECTION SCHEDULE SEE SHEET 68-70
FOR SANITARY SEWER CONNECTION SCHEDULE SEE SHEET 71-73
FOR SANITARY SEWER DETAILS SEE SHEET 329-331
FOR CULVERT DETAILS SEE SHEET 321

ROADWAY		202 GUARDRAIL REMOVED	202 PIPE REMOVED (24" & UNDER)	202 PIPE REMOVED FOR STORAGE, A.P.P.	202 STRUCTURE REMOVED
REF.	LOCATION	L.F.	L.F.	L.F.	LUMP
R-1	STA. 126+48.00 TO STA. 127+50.00, RT.	166			
R-2	STA. 127+08.00 TO STA. 128+08.00, LT.	100			
R-3	STA. 125+25.00 TO STA. 127+16.00 20' RT.		191		
R-4	STA. 127+13.00, 36'RT. TO STA. 127+45.00, 39'LT.			82	LUMP
R-5	STA. 127+53.00, 44'LT. TO STA. 129+00.00, 24'LT.		149		
	TOTALS	266	340	82	LUMP

DRAINAGE & SANITARY

Item	Description	Unit	D-1	D-2	D-3	D-4	D-5	D-6	D-7	S-1	S-2	S-3	S-4	S-5	TOTALS
607	8' X 4' CONDUIT TYPE A 706.05 (DESIGN EARTH COVER EQUALS 3.3 FT.)	L.F.							130						130
604	CATCH BASIN NO. 3A, AS PER PLAN	E.A.				1	1								2
604	CATCH BASIN NO. 3, AS PER PLAN	E.A.	1	1											2
604	MANHOLE RECONSTRUCTED TO GRADE AS PER PLAN	E.A.								1	1	1			3
604	MANHOLE AS PER PLAN TYPE A	E.A.											1		1
603	8" CONDUIT, TYPE B AS PER PLAN 706.08 WITH JOINTS AS PER 706.12	L.F.												144	144
603	12" CONDUIT, TYPE C, 706.02 WITH JOINTS AS PER 706.11	L.F.		7											7
603	12" CONDUIT, TYPE B, 706.02 WITH JOINTS AS PER 706.11	L.F.	52			10	8								70
603	43" x 68" CONDUIT TYPE B, 706.04 CLASS HE I WITH JOINTS AS PER 706.11	L.F.						170							170
603	34" x 53" CONDUIT TYPE C, 706.04 CLASS HE II WITH JOINTS AS PER 706.11	L.F.			185										185
602	CONCRETE MASONRY	C.Y.							5.18						5.18
601	30" ROCK CHANNEL PROTECTION TYPE B WITH FILTER	C.Y.							6.5						6.5
601	RIPRAP USING 6" REINFORCED CONCRETE SLAB	S.Y.							7.8						7.8

REF.	LOCATION
D-1	STA. 125+60.71, 26.00' LT. TO STA. 125+60.71, 26.00' RT.
D-2	STA. 125+60.71, 26.00' RT. TO STA. 125+60.71, 34.00' RT.
D-3	STA. 125+25.00, 34.00' RT. TO STA. 127+12.00, 34.00' RT.
D-4	STA. 127+20.00, 26.00' RT. TO STA. 127+30.00, 26.00' RT.
D-5	STA. 127+42.00, 26.00' LT. TO STA. 127+50.00, 26.00' LT.
D-6	STA. 127+35.00, 7.00' LT. TO STA. 129+00.00, 7.00' LT.
D-7	STA. 127+54.00, 60.00' LT. TO STA. 127+02.00, 60' RT.
S-1	STA. 126+50.00, 15.00' RT.
S-2	STA. 127+44.00, 10.00' RT.
S-3	STA. 127+50.00, 15.00' RT.
S-4	STA. 127+56.00, 19.00' LT.
S-5	STA. 127+56.00, 19.00' LT. TO STA. 129+00.00, 19.00' LT.
	TOTALS