FED. RD. DIVISION	STATE	PROJ.	
2	OHIO		

44
46

LAK-20/84/283/306/615

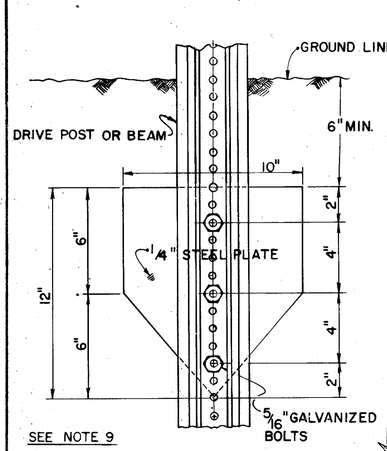

SOIL PLATE DETAIL

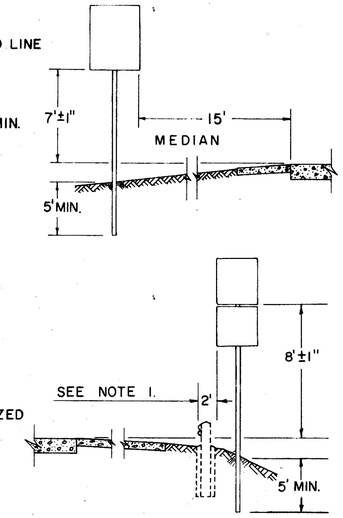

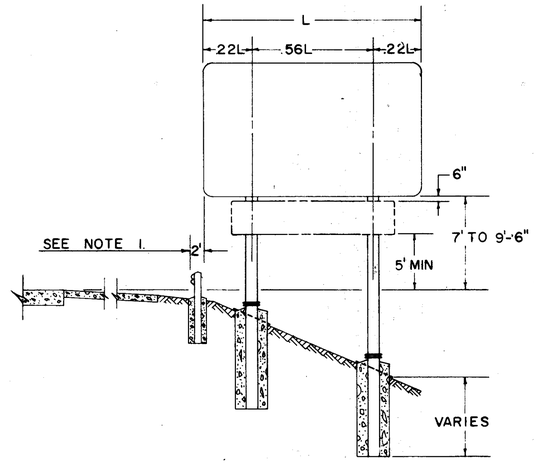

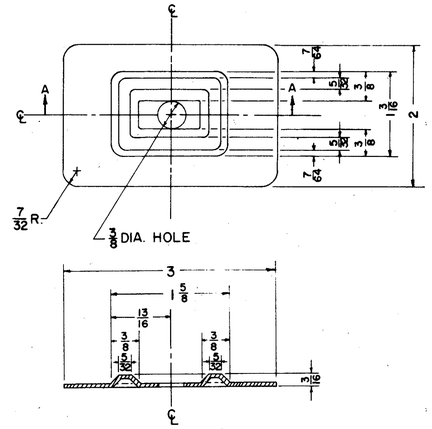

SECTION AA

NOTE:
THE PLATE IS SYMMETRICAL ABOUT EITHER CENTERLINE.
METAL SHALL BE 16 GAUGE STEEL.
ALL DIMENSIONS ARE IN INCHES.

BEARING PLATE DETAIL

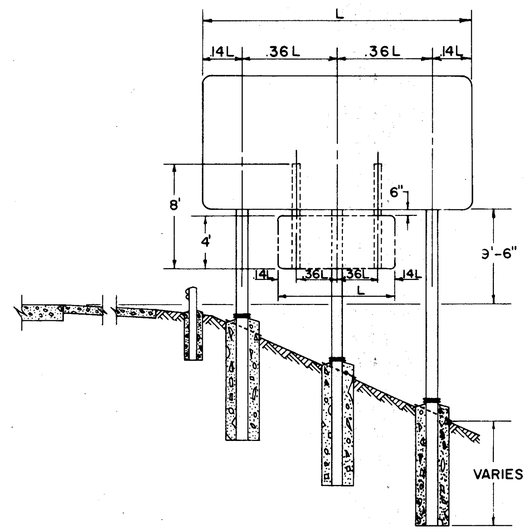

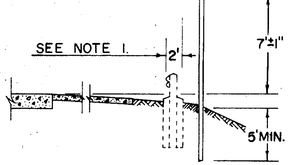

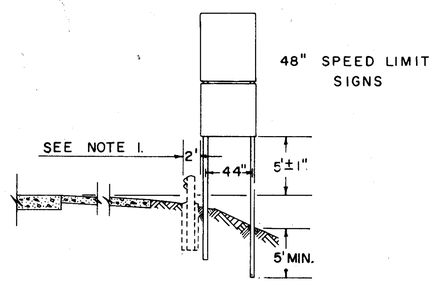

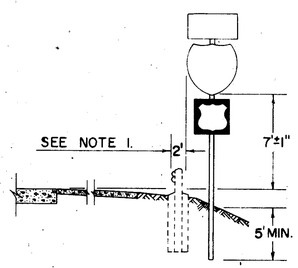

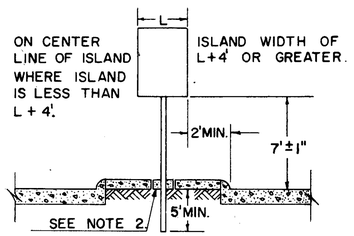

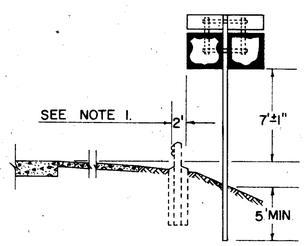

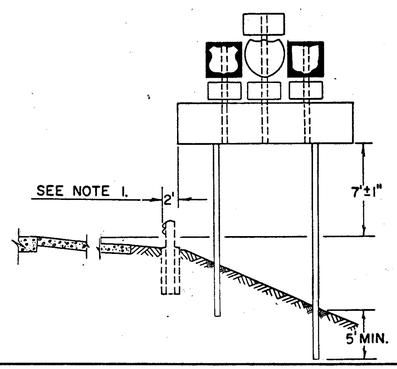

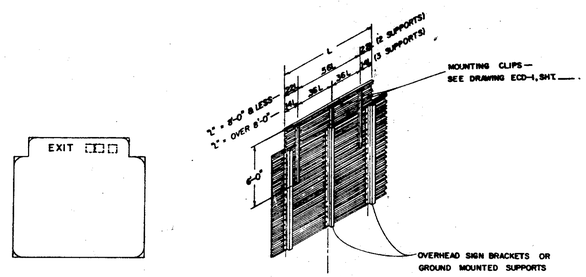

"EXIT" SIGN ATTACHMENT DETAIL

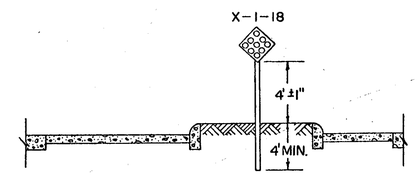

SIGN SUPPORT SPACING

L=FT	2 SUPPORTS .22	2 SUPPORTS .56	3 SUPPORTS .14	3 SUPPORTS .36	L=FT	2 SUPPORTS .22	2 SUPPORTS .56	3 SUPPORTS .14	3 SUPPORTS .36
5.0	1.10	2.80	0.70	1.80	17.0	3.74	9.52	2.38	6.12
6.0	1.32	3.36	0.84	2.16	18.0	3.96	10.08	2.52	6.48
7.0	1.54	3.92	0.98	2.52	19.0	4.18	10.64	2.66	6.84
8.0	1.76	4.48	1.12	2.88	20.0			2.80	7.20
9.0	1.98	5.04	1.26	3.24	21.0			2.94	7.56
10.0	2.20	5.60	1.40	3.60	22.0			3.08	7.92
11.0	2.42	6.16	1.54	3.96	23.0			3.22	8.28
12.0	2.64	6.72	1.68	4.32	24.0			3.36	8.64
13.0	2.86	7.28	1.82	4.68	25.0			3.50	9.00
14.0	3.08	7.84	1.96	5.04	26.0			3.64	9.36
15.0	3.30	8.40	2.10	5.40	27.0			3.78	9.72
16.0	3.52	8.96	2.24	5.76	28.0			3.92	10.08

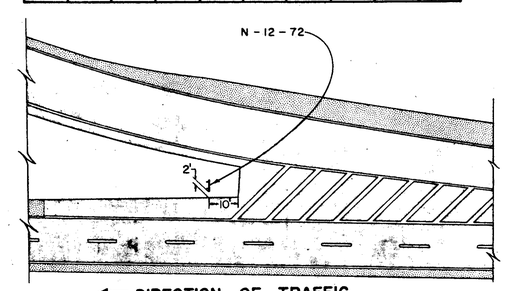

DIRECTION OF TRAFFIC

NOTES

1. THE NEAR EDGE OF ALL MAIN LINE SIGNS, EXCEPT GORE INSTALLATIONS, SHALL BE LOCATED TWO FEET (2') BACK OF GUARD RAIL FACE. THIS DIMENSION SHALL BE DETERMINED BY ROADWAY TYPICAL SECTION & USED WHETHER OR NOT GUARD RAIL IS PRESENT.
   ON RAMPS THE NEAR EDGE OF SIGNS SHALL BE LOCATED TWO FEET (2') BACK OF GUARD RAIL FACE. THIS DIMENSION WILL BE DETERMINED AND USED AS FOR MAIN LINE ABOVE.
   ON APPROACHES THE NEAR EDGE OF SIGNS SHALL BE
   (A) TWO FOOT (2') BEHIND EXISTING GUARD RAIL
   (B) TWO FEET (2') FROM THE EDGE OF PAVED OR TRAVELED SHOULDER WITH A MINIMUM OF 6' FROM EDGE OF ROADWAY PAVEMENT.

2. POSTS PLACED IN CONCRETE MEDIANS SHALL BE INSTALLED BY DRIVING THROUGH A 6" SLEEVE OR CORE DRILLED HOLE. THE HOLE SHALL BE FILLED WITH ASPHALTIC CONCRETE AFTER THE POST IS IN THE PROPER POSITION.

3. HORIZONTAL BACK BRACING SHALL ALWAYS BE MOUNTED ON THE FRONT FLANGE OF THE SUPPORT EXCEPT WHERE SIGNS ARE MOUNTED BACK TO BACK. BACK BRACING SHALL NEVER EXTEND ABOVE TOP EDGE OF UPPERMOST SIGN PLATE AND SHALL BE ATTACHED TO SUPPORTS USING 5/16" GALVANIZED STEEL BOLTS.

4. SCREWS, NUTS, AND WASHERS FOR SIGN ERECTION SHALL BE ALUMINUM EXCEPT AS NOTED ABOVE. 5/16" TRUSS HEAD SLOTTED MACHINE SCREWS WITH HEX. NUTS PLAIN AND LOCKWASHERS SHALL BE USED. PLAIN WASHERS SHALL BE 5/16" WIDE", USED ON SIGN FACE ONLY

5. SIGN INSTALLATIONS SHALL BE PLACED SO THAT SUPPORTS ARE NOT PLACED IN DRAINAGE DITCHES.

6. HORIZONTAL CLEARANCES SHOWN PERTAIN TO NON-CURBED SECTIONS. SECTIONS WITH UNMOUNTABLE CURB SHALL HAVE A HORIZONTAL CLEARANCE OF 2'-0" MINIMUM FROM THE CURB FACE TO THE SIGN EDGE.

7. VERTICAL AND HORIZONTAL CLEARANCE BETWEEN SIGNS ON ONE ASSEMBLY SHALL BE A MAXIMUM OF 2" AND A MINIMUM OF 1".

8. GALVANIZED STEEL BEARING PLATES SHALL BE INCLUDED BETWEEN ALL SHEET ALUMINUM SIGNS ATTACHED TO VERTICAL SUPPORTS AT EACH SIGN BOLT LOCATION.

9. SOIL PLATES SHALL BE ATTACHED TO ALL 6 LB. BEAMS BETWEEN POSTS AS DETAILED ON THIS SHEET, EXCEPT WHERE BEAMS ARE PLACED IN CONCRETE MEDIANS AS COVERED IN NOTE 2.

BUREAU OF TRAFFIC
OHIO DEPARTMENT OF HIGHWAYS

TYPICAL PLACEMENT OF SIGNS

TPS-1

DATE
9-27-67
7-12-68
5-13-69
3-5-71
12-21-71
3-7-72

APPROVED _____
ENGINEER OF TRAFFIC