LAKE COUNTY
LAK-20-5.60

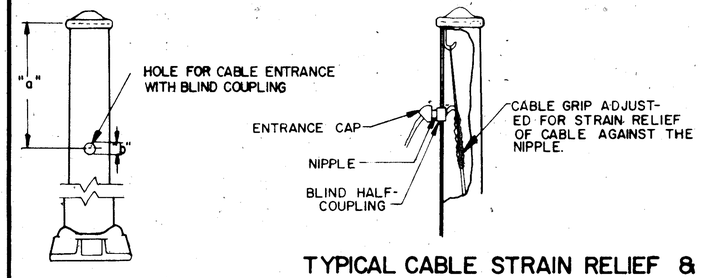

TYPICAL CABLE STRAIN RELIEF & ENTRANCE CAP DETAILS

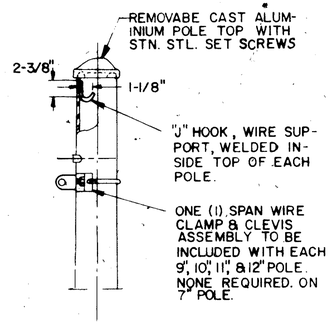

POLE TOP DETAILS

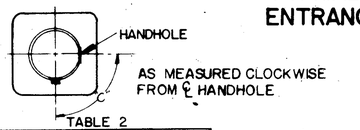

TABLE 2

CONFIG.	"a"	"b"	"c"
A	30"	2"	90°
B	30"	2"	180°
C	30"	2"	270°
D	48"	2"	90°
E	48"	2"	180°
F	48"	2"	270°
G	NO HOLE REQUIRED		

CABLE ENTRANCE LOCATION DETAIL

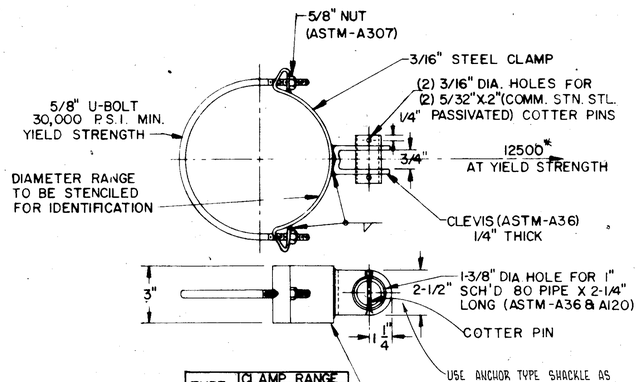

TYPE	CLAMP RANGE MIN.	CLAMP RANGE MAX.
I	3.1"	3.6"
II	3.6"	4.4"
III	4.4"	5.2"
IV	5.2"	5.8"
V	5.8"	6.8"
VI	6.8"	7.9"
VII	7.9"	9.0"
VIII	9.0"	10.1"
IX	10.1"	11.3"
X	11.3"	12.1"
XI	12.1"	13.4"
XII	13.4"	14.5"
XIII	14.5"	15.5"
XIV	15.5"	16.5"

SPAN WIRE CLAMP DETAILS

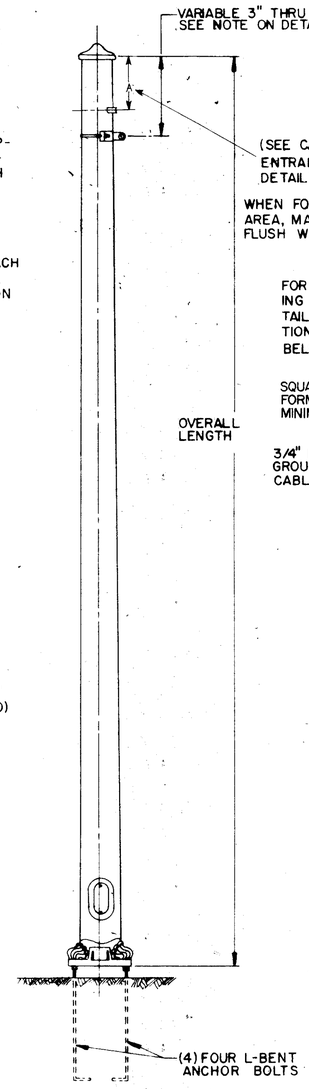

STEEL STRAIN POLE

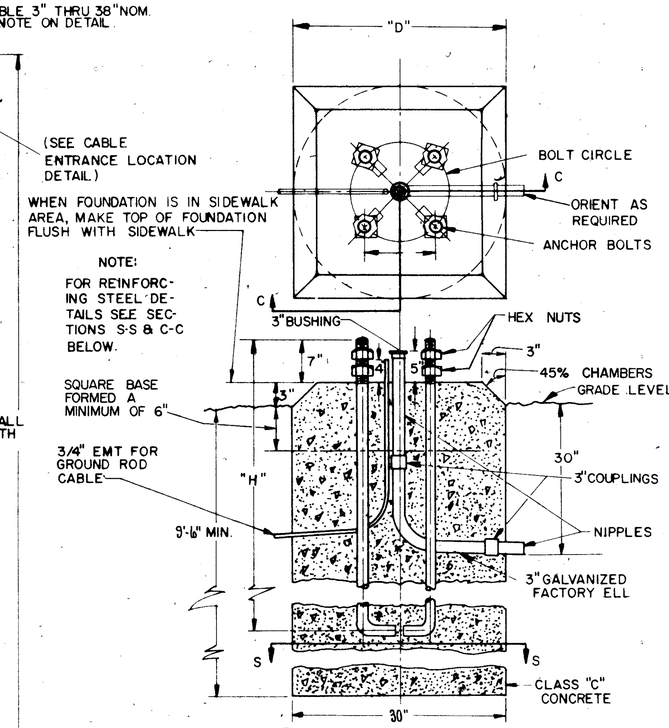

TYPICAL STRAIN POLE FOUNDATION

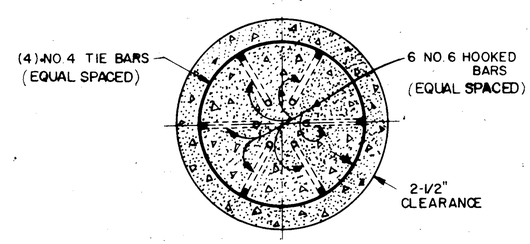

SECTION-S-S

NOTES

MATERIAL SPECIFICATIONS

1. TAPERED TUBES (S.A.E.-1020 STEEL PROCESSED TO MINIMUM YIELD STRESS OF 55,000 P.S.I.
2. CAST ANCHOR BASE & HANDHOLE FRAME - ASTM-A27-GRADE 65-35.
3. HANDHOLE COVER PLATE - 11 GA. STEEL SAE-1015
4. CAST ALUMINUM POLE TOP - ALUMINUM. ALLOY 43
5. SPAN WIRE CLAMP - LOW ALLOY. HIGH STRENGTH STEEL ASTM-A242 - OR 375, LOAD PRODUCING DISTORTION 12,500 LBS. DIRECT TENSION
6. ALL BOLTS & NUTS LESS THAN 5/8" DIA. PASSIVATED STAINLESS STEEL AISI-300 SERIES - COMMERCIAL GRADE.
7. ALL OTHER NUTS & BOLTS 5/8" DIA. & OVER - ASTM-A307 AND GALVANIZED IN ACCORDANCE WITH ASTM-A153
8. ANCHOR BASE & U-BOLTS - HIGH STRENGTH STEEL - MINIMUM YIELD STRESS 55,000 LBS. SQ. IN. - MIN. ULTIMATE 90,000 P.S.I.
9. WELDING ROD - ASTM-A233 - CLASS E60XX OR 70XX.
10. GALVANIZING - WHEN SPECIFIED ASTM-A123.

TRAFFIC SIGNAL POLE FOUNDATIONS

THE CONTRACTOR SHALL STAKE THE LONGITUDINAL AND LATERAL LOCATION, AND THE ELEVATION OF THE TOP OF EACH FOUNDATION SUBJECT TO THE APPROVAL OF THE ENGINEER. THE CONTRACTOR SHALL BE RESPONSIBLE FOR THE PROPER ELEVATION, OFFSET, AND LEVEL OF EACH FOUNDATION. THE FOUNDATION LOCATIONS MAY BE CHANGED AS DIRECTED BY THE ENGINEER, IN CASE OF SLOPE OR SUBSURFACE DIFFICULTIES.

EXCAVATION SHALL BE IN ACCORDANCE WITH THE REQUIREMENTS OF ITEM 503. EXCAVATION SHALL BE TO THE DIMENSIONS SHOWN ON THE PLANS, AND SHALL BE PERFORMED BY MEANS OF AN EARTH AUGER OF THE SPECIFIED DIA. UNLESS OTHERWISE DIRECTED BY THE ENGINEER.

WHERE SUBSURFACE OBSTRUCTIONS ARE ENCOUNTERED, THE ENGINEER MAY REQUIRE THE CONTRACTOR TO REMOVE THE OBSTRUCTION OR TO REPLACE THE EXCAVATED MATERIAL AND RELOCATE THE FOUNDATION.

IF CAVING OF THE EXCAVATION OCCURS, THE CONTRACTOR SHALL EXCAVATE THE SPECIFIED DEPTH MAINTAINING THE THE SIDES AS NEARLY VERTICAL AS POSSIBLE. NO PAYMENT SHALL BE MADE FOR ANY EXCAVTION, CONCRETE, OR REINFORCING STEEL USED IN EXCESS OF THE PLAN QUANTITES.

CONCRETE, CLASS C, SHALL BE PLACED IN ACCORDANCE WITH THE REQUIREMENTS OF ITEM 511, AND SHALL BE PLACED AGAINST UNDISTURBED SOIL OR COMPACTED EMBANKMENT. STEEL REINFORCEMENT BARS, WHERE REQUIRED, SHALL BE POSITIONED AS SHOWN ON THE PLANS AND PLACED IN ACCORDANCE WITH ITEM 509.

CYLINDRICAL ANCHOR BASE TYPE FOUNDATIONS FOR TRAFFIC SIGNAL POLES SHALL HAVE ANCHOR BOLTS AND CONDUIT ACCURATELY HELD IN POSITION WITH A TEMPLET WHILE CONCRETE IS PLACED. FORMS SHALL BE USED FOR THE UPPER PORTIONS OF ALL FOUNDATIONS AND NO BACKFILLING SHALL BE PERMITTED FROM THE BOTTOM TO SIX INCHES BELOW THE GRADE LEVEL. NO GROUTING OF CONCRETE SHALL BE PERMITTED BETWEEN THE FOUNDATION TOP AND THE POLE BASE.

TRAFFIC SIGNAL POLE

WHERE A WIRE ENTRANCE IS REQUIRED, THE SERVICE ENTRANCE HEAD SHALL BE LOCATED APPROXIMATELY 12" BELOW SPAN WIRE CLAMP.

GROUND ROD

GROUND ROD SHALL BE IN ACCORDANCE WITH TYPICAL GROUND ROD DETAIL AND TESTED IN ACCORDANCE WITH 625.22 "CONSTRUCTION AND MATERIAL SPECIFICATIONS."

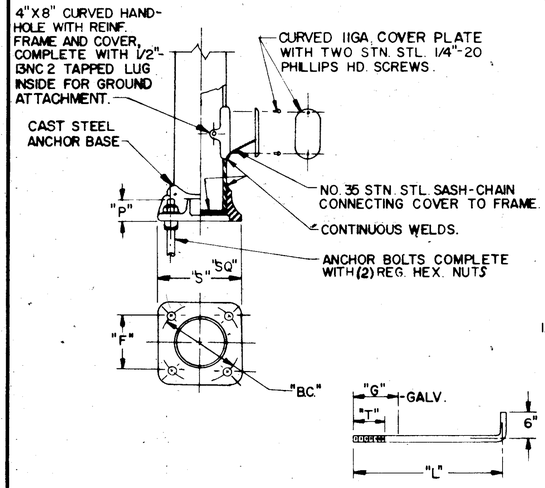

ANCHOR BASE DATA					ANCHOR BOLT DATA			
POLE DIA.	"BC"	"F"	"S"	"P"	SIZE	"L"	"T"	"G"
7"	10"	7 1/16	10 1/2"	2 1/4"	1/4" X 48"	42"	8"	10"
9"	12-1/2"	8-7/8"	12-3/4"	3"	1/2" X 60"	54"	9"	11"
10"	13-1/2"	9-9/16	14-1/8"	3-3/8"	1-1/2" X 60"	54"	9"	11"
11"	15"	10-5/8"	15-5/8"	3-5/8"	1-3/4" X 90"	84"	9"	11"
12"	16"	11-5/16	17"	4"	1-3/4" X 90"	84"	9"	11"

TYPICAL HANDHOLE, ANCHOR BASE & ANCHOR BOLT DETAILS

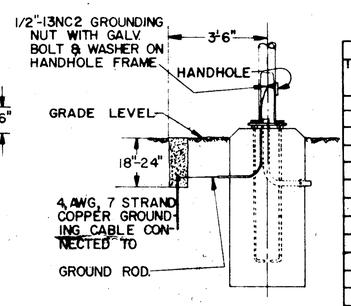

TYPICAL GROUND ROD DETAIL

TYPE	BASE DIA.	TOP DIA.	OVERALL LENGTH	WALL THICKNESS	DESIGN DATA FOR TRANSVERSE LOAD AT 18" DOWN FROM TOP: ELAST. DEFL. RATE	DESIGN DATA FOR TRANSVERSE LOAD AT 18" DOWN FROM TOP: YIELD STRENGTH	"H"	"D"
1	7.0"	4.20	20.0'	(3 GA.) 0.239"	.59"/100#	2135#	42"	24"
2	9.0"	5.36"	26.0'		.64"/100#	2720#	54"	24"
3	10.0"	6.36"			.44"/100#	3400#	54"	24"
4	11.0"	7.36"			.32"/100#	4140#	84"	30"
5	12.0"	8.36"			.24"/100#	4960#	84"	36"
6	9.0"	5.08"	28.0'		.84"/100#	2520#	54"	24"
7	10.0"	6.08"			.54"/100#	3140#	54"	24"
8	11.0"	7.08"			.41"/100#	3850#	84"	30"
9	12.0"	8.08"			.31"/100#	4550#	84"	36"
10	9.0"	4.80"	30.0'		1.10"/100#	2350#	54"	24"
11	10.0	5.80"			.74"/100#	2920#	54"	24"
12	11.0"	6.80"			.53"/100#	3560#	84"	30"
13	12.0	7.80"			.39"/100#	4260#	84"	36"

STRAIN POLE TYPES

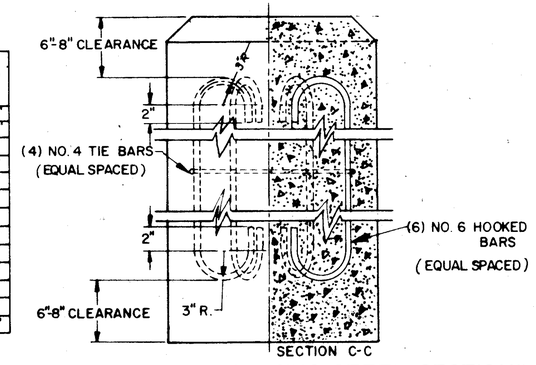

SECTION C-C

TYPICAL REINFORCING STEEL SECTIONS

BUREAU OF TRAFFIC
OHIO DEPARTMENT OF HIGHWAYS

STEEL STRAIN POLE & FOUNDATION DETAILS

APPROVED _____
ENGINEER OF TRAFFIC