CALC. BY: DATE:	LAKE COUNTY LAK-20-2.70	OHIO
CHKD. BY: DATE:		FHWA REGION 5
		FEDERAL PROJECT

75
98

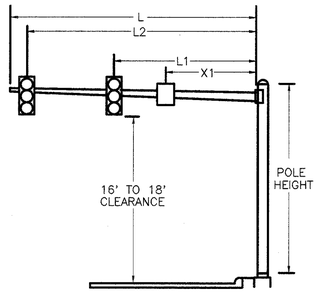

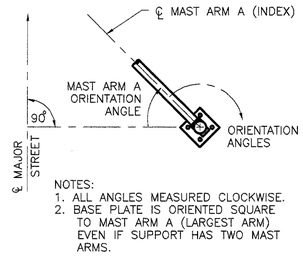

NOTES:
1. ALL ANGLES MEASURED CLOCKWISE.
2. BASE PLATE IS ORIENTED SQUARE TO MAST ARM A (LARGEST ARM) EVEN IF SUPPORT HAS TWO MAST ARMS.

SUPPORT NO.	SIGNAL SUPPORT TC-81.20 TC-12.30: POLE DESIGN NO. TC-81.20	POLE DESIGN NO. TC-12.30	ARM DESIGN NO.	POLE HEIGHT (FT)	FOUNDATION STATION	FOUNDATION OFFSET	L (FT.)	L 1 (FT.)	L 2 (FT.)	L 3 (FT.)		X 1 (FT.)	MAST ARM A ANGLE (DEC.)	ORIENTATION ANGLES (DEG.) FROM MAST ARM "A": MAST ARM B	PEDESTRIAN SIGNALS	PEDESTRIAN PUSH BUTTONS	POWER SERVICE	CONTROLLER	LUMINAIRE BRACKET	HANDHOLE	CABLE ENTRANCE (12" FROM TOP)		
P1	2		2	20	157+82	39'L	28	17	27				0		0/270	0/270				180			
P2	PED			8'	158+47	39'L							0		0	0				180			
P3	4		2	20	158+59	35'R	27	16	26				270							180			
			2				25	13	24					90									
P4	PED			8'	157+82	34'R							0		0	90				180			

ORIENTATION ANGLE CHART

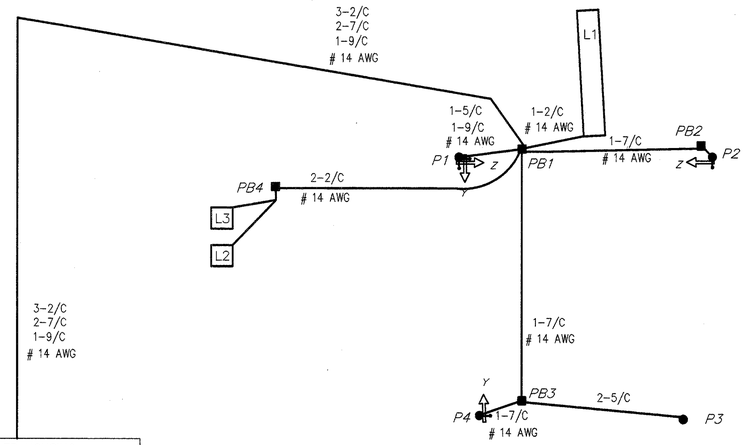

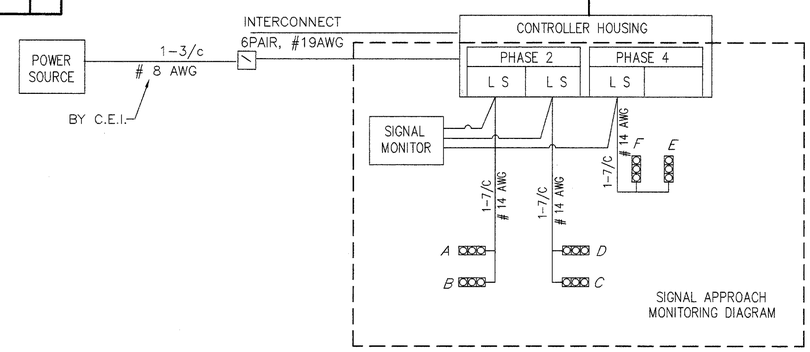

WIRING DIAGRAM

NOTES:

1. PHASE SPLITS SHALL INCLUDE ALL GREEN PLUS YELLOW & ALL RED
2. PERMISSIVES SHALL START AT THE ZERO POINT OF THE CYCLE
3. OFFSETS SHALL BE REFERENCED TO THE BEGINNING OF PHASE 2 YELLOW

	DIAL 1	DIAL 2	DIAL 3
CYCLE LENGTH	90	100	110
PHASE 2 SPLIT	85 %	88 %	88 %
PHASE 4 SPLIT	15 %	12 %	12 %
PERMISSIVE	15 %	15 %	15 %
OFFSET	60 %	44 %	48 %
TIME OF DAY SCHEDULE	ALL OTHER TIMES	6:30AM TO 9:00AM MON-SAT	3:30PM TO 6:30PM MON-SAT

COORDINATION TIMING

SIGNAL HEAD	ø2 R/W		ø2 CLEAR		ø4 R/W		ø4 CLEAR		FLASH
A	G	G	Y	R	R	R	R	R	Y
B	G	G	Y	R	R	R	R	R	Y
C	G	G	Y	R	R	R	R	R	Y
D	G	G	Y	R	R	R	R	R	Y
E	R	R	R	R	G	G	Y	R	R
F	R	R	R	R	G	G	Y	R	R
Y-Y	DW	DW	DW	DW	W	FDW	DW	DW	DARK
Z-Z	W	FDW	DW	DW	DW	DW	DW	DW	DARK

SIGNAL DISPLAY CHART

LOOP #	SIZE	# TURNS	MODE	DELAY	UNIT #	PHASE
L1	6' x 35'	2	PRESENCE	8	1	4
L2	6' x 6'	3	PRESENCE	0	2	SYSTEM
L3	6' x 6'	3	PRESENCE	0	3	SYSTEM

LOOP DETECTOR CHART

FUNCTION	ø2	ø4
MINIMUM GREEN	21	10
PED WALK	7	7
PED CLEARANCE	13	14
GREEN EXTENSION	–	3.5
MAXIMUM GREEN	97	22
YELLOW CLEARANCE	3.9	3.3
ALL RED CLEARANCE	0.7	2.0
RECALL	PED	NONE

SIGNAL TIMING

N

100% CITY PARTICIPATION

ITEM	TOTAL	UNIT	DESCRIPTION
202	5	LIN FT	CURB REMOVED
202	75	SQ FT	WALK REMOVED
608	100	SQ FT	4" CONCRETE WALK
608	25	SQ FT	CURB RAMP, TYPE 2
625	6	EACH	GROUND ROD
625	4	EACH	PULLBOX, MISC AS PER PLAN
625	247	LIN FT	CONDUIT, 2", 713.04
625	10	LIN FT	CONDUIT, 3", 713.04
625	122	LIN FT	CONDUIT, JACKED OR DRILLED UNDER PAVEMENT, 3"
625	211	LIN FT	TRENCH
632	6	EACH	VEHICULAR SIGNAL HEAD, 3 SECT., 12" LENS, 1-WAY, AS PER PLAN
632	4	EACH	PEDESTRIAN SIGNAL HEAD, TYPE D2
632	4	EACH	PEDESTRIAN PUSHBUTTON
632	2	EACH	LOOP DETECTOR UNIT, AS PER PLAN
632	1	EACH	LOOP DETECTOR UNIT, DELAY AND EXTENSION TYPE, AS PER PLAN
632	5.1	CU YD	CONCRETE FOR ANCHOR BASE FOUNDATION
632	1	EACH	SIGNAL SUPPORT, TYPE TC-81.20, DES. 2, WITH 28' ARM
632	1	EACH	SIGNAL SUPPORT, TYPE TC-81.20, DES. 4 WITH MAST ARMS TYPE TC-81.20 DES. 2, 27' AND TYPE TC-81.20, DES. 2, 25'
632	2	EACH	PEDESTAL, 8', TRANSFORMER BASE
632	2	EACH	CABLE SUPPORT ASSEMBLY
632	178	LIN FT	LOOP DETECTOR PAVEMENT CUTTING
632	738	LIN FT	SIGNAL CABLE, 7 CONDUCTOR, NO. 14 AWG
632	64	LIN FT	SIGNAL CABLE, 9 CONDUCTOR, NO. 14 AWG
632	540	LIN FT	LOOP DETECTOR WIRE, TYPE E
632	220	LIN FT	LOOP DETECTOR LEAD-IN CABLE
632	76	LIN FT	POWER CABLE, 3 CONDUCTOR, NO. 8 AWG
632	1	EACH	CONDUIT RISER, 1 1/2"
632	6	EACH	COVERING OF VEHICULAR SIGNAL HEAD
632	1	EACH	REMOVAL OF TRAFFIC SIGNAL INSTALLATION, AS PER PLAN
633	0.99	CU YD	CONCRETE FOR CABINET FOUNDATION
633	1	EACH	CONTROLLER, ACTUATED, 4 PHASE SOLID STATE DIGITAL MICROPROCESSOR, AS PER PLAN

S.O.M. CENTER ROAD (91) & COLONIAL BLVD. TRAFFIC CONTROL PLAN