CALC. BY: DATE:	LAKE COUNTY LAK-20-2.70	OHIO
CHKD. BY: DATE:		FHWA REGION 5
		FEDERAL PROJECT

69
98

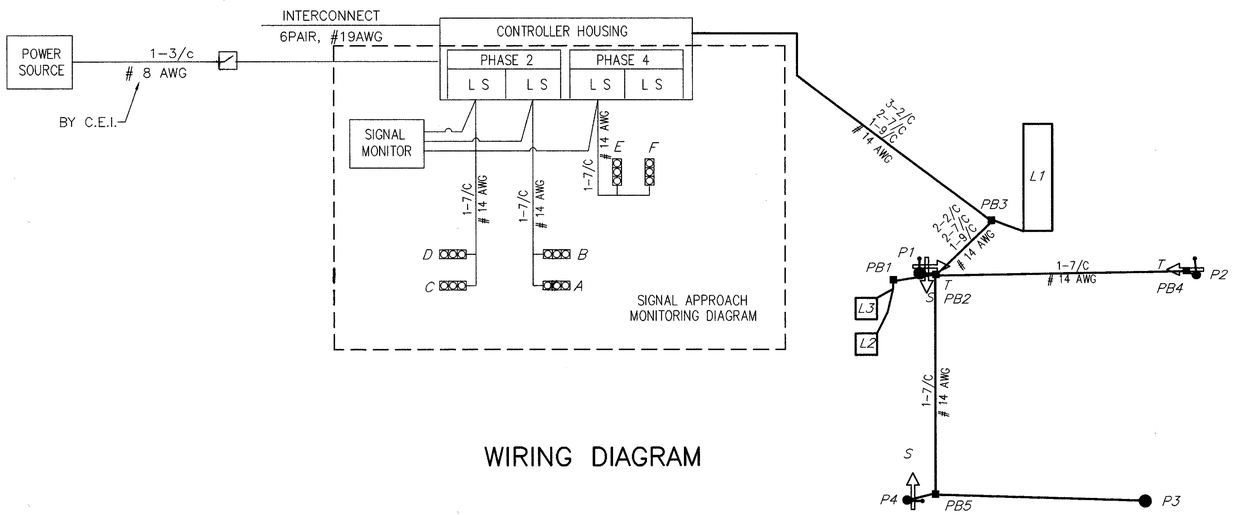

WIRING DIAGRAM

FUNCTION	ø2	ø4
MINIMUM GREEN	19	8
PED WALK	7	7
PED CLEARANCE	12	14
GREEN EXTENSION	3.0	3.0
MAXIMUM GREEN	78	22
YELLOW CLEARANCE	3.9	3.1
ALL RED CLEARANCE	0.8	1.9
RECALL	PED	NONE

SIGNAL TIMING

NOTES:

1. PHASE SPLITS SHALL INCLUDE ALL GREEN PLUS YELLOW & ALL RED
2. PERMISSIVES SHALL START AT THE ZERO POINT OF THE CYCLE
3. OFFSETS SHALL BE REFERENCED TO THE BEGINNING OF PHASE 2 YELLOW

	DIAL 1	DIAL 2	DIAL 3
CYCLE LENGTH	90	100	110
PHASE 2 SPLIT	71 %	74 %	76 %
PHASE 4 SPLIT	29 %	26 %	24 %
PERMISSIVE	15 %	15 %	15 %
OFFSET	2 %	94 %	1 %
TIME OF DAY SCHEDULE	ALL OTHER TIMES	6:30AM TO 9:00AM MON-SAT	3:30PM TO 6:30PM MON-SAT

COORDINATION TIMING

N

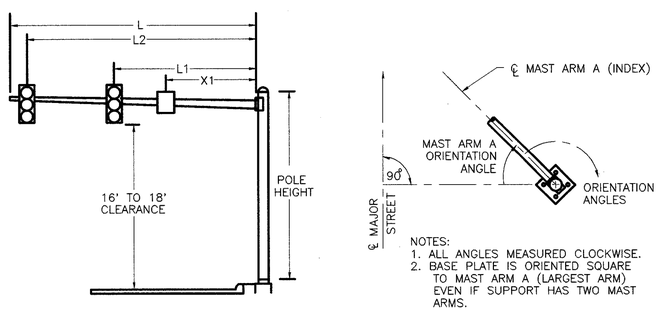

NOTES:
1. ALL ANGLES MEASURED CLOCKWISE.
2. BASE PLATE IS ORIENTED SQUARE TO MAST ARM A (LARGEST ARM) EVEN IF SUPPORT HAS TWO MAST ARMS.

SIGNAL HEAD	ø2 R/W		ø2 CLEAR		ø4 R/W		ø4 CLEAR		FLASH
A	G	G	Y	R	R	R	R	R	Y
B	G	G	Y	R	R	R	R	R	Y
C	G	G	Y	R	R	R	R	R	Y
D	G	G	Y	R	R	R	R	R	Y
E	R	R	R	R	G	G	Y	R	R
F	R	R	R	R	G	G	Y	R	R
S-S	DW	DW	DW	DW	W	FDW	DW	DW	DARK
T-T	W	FDW	DW	DW	DW	DW	DW	DW	DARK

SIGNAL DISPLAY CHART

SUPPORT NO.	SIGNAL SUPPORT TC-81.20 TC-12.30: POLE DESIGN NO. TC-81.20	POLE DESIGN NO. TC-12.30	ARM DESIGN NO.	POLE HEIGHT (FT)	FOUNDATION STATION	FOUNDATION OFFSET	L (FT.)	L 1 (FT.)	L 2 (FT.)	L 3 (FT.)			X 1 (FT.)	MAST ARM A ANGLE (DEG.)	ORIENTATION ANGLES (DEG.) FROM MAST ARM "A": MAST ARM B	PEDESTRIAN SIGNALS	PEDESTRIAN PUSH BUTTONS	POWER SERVICE	CONTROLLER	LUMINAIRE BRACKET	HANDHOLE	CABLE ENTRANCE (12" FROM TOP)		
P1	1			20'	141+86	32'L	23	9	22					0		180 270	180 270				180			
P2	PED			8'	142+63	32'L								0		180	180				180			
P3	4		3	20'	142+49	32'R	32	23	31					270							180			
			2				25	11	24						90									
P4	PED			8'	141+82	32'R								0		90	90				180			

ORIENTATION ANGLE CHART

LOOP #	SIZE	# TURNS	MODE	DELAY	UNIT #	PHASE
L1	8' x 30'	2	PRESENCE	8	1	4
L2	6' x 6'	3	PRESENCE	0	2	SYSTEM
L3	6' x 6'	3	PRESENCE	0	3	SYSTEM

LOOP DETECTOR CHART

ITEM	TOTAL	UNIT	DESCRIPTION
202	95	SQ FT	WALK REMOVED
608	95	SQ FT	4" CONCRETE WALK
625	5	EACH	GROUND ROD
625	5	EACH	PULLBOX, MISC. AS PER PLAN
625	147	LIN FT	CONDUIT, 2", 713.04
625	33	LIN FT	CONDUIT, 3", 713.04
625	132	LIN FT	CONDUIT, JACKED OR DRILLED UNDER PAVEMENT, 3"
625	119	LIN FT	TRENCH
630	1	EACH	REMOVAL OF GROUND MOUNTED SIGN & STORAGE
630	1	EACH	REMOVAL OF GROUND MOUNTED POST SUPPORT & DISPOSAL
632	6	EACH	VEHICULAR SIGNAL HEAD, 3 SECT., 12" LENS, 1-WAY, AS PER PLAN
632	4	EACH	PEDESTRIAN SIGNAL HEAD, TYPE D2
632	4	EACH	PEDESTRIAN PUSHBUTTON
632	2	EACH	LOOP DETECTOR UNIT, AS PER PLAN
632	1	EACH	LOOP DETECTOR UNIT, DELAY AND EXTENSION TYPE, AS PER PLAN
632	4.92	CU YD	CONCRETE FOR ANCHOR BASE FOUNDATION
632	1	EACH	SIGNAL SUPPORT, TYPE TC-81.20, DES. 1, WITH 23' ARM
632	1	EACH	SIGNAL SUPPORT, TYPE TC-81.20, DES. 4 WITH MAST ARMS
			TYPE TC-81.20, DES. 3, 32' AND TYPE TC-81.20, DES. 2, 25'
632	2	EACH	PEDESTAL, 8', TRANSFORMER BASE
632	2	EACH	CABLE SUPPORT ASSEMBLY
632	150	LIN FT	LOOP DETECTOR PAVEMENT CUTTING
632	883	LIN FT	SIGNAL CABLE, 7 CONDUCTOR, NO. 14 AWG
632	72	LIN FT	SIGNAL CABLE, 9 CONDUCTOR, NO. 14 AWG
632	392	LIN FT	LOOP DETECTOR WIRE, TYPE E
632	151	LIN FT	LOOP DETECTOR LEAD-IN CABLE
632	78	LIN FT	POWER CABLE, 3 CONDUCTOR, NO. 8 AWG
632	1	EACH	CONDUIT RISER, 1 1/2"
632	6	EACH	COVERING OF VEHICULAR SIGNAL HEAD
633	8.33	SQ FT	CONTROLLER WORK PAD
633	0.99	CU YD	CONCRETE FOR CABINET FOUNDATION
633	1	EACH	CONTROLLER, ACTUATED, 4 PHASE, SOLID STATE DIGITAL MICROPROCESSOR,
			AS PER PLAN
642	81	LIN FT	STOP LINE, TYPE 2
642	109	LIN FT	CROSSWALK LINES, TYPE 2

S.O.M. CENTER ROAD (91) & HALLE DRIVE TRAFFIC CONTROL PLAN