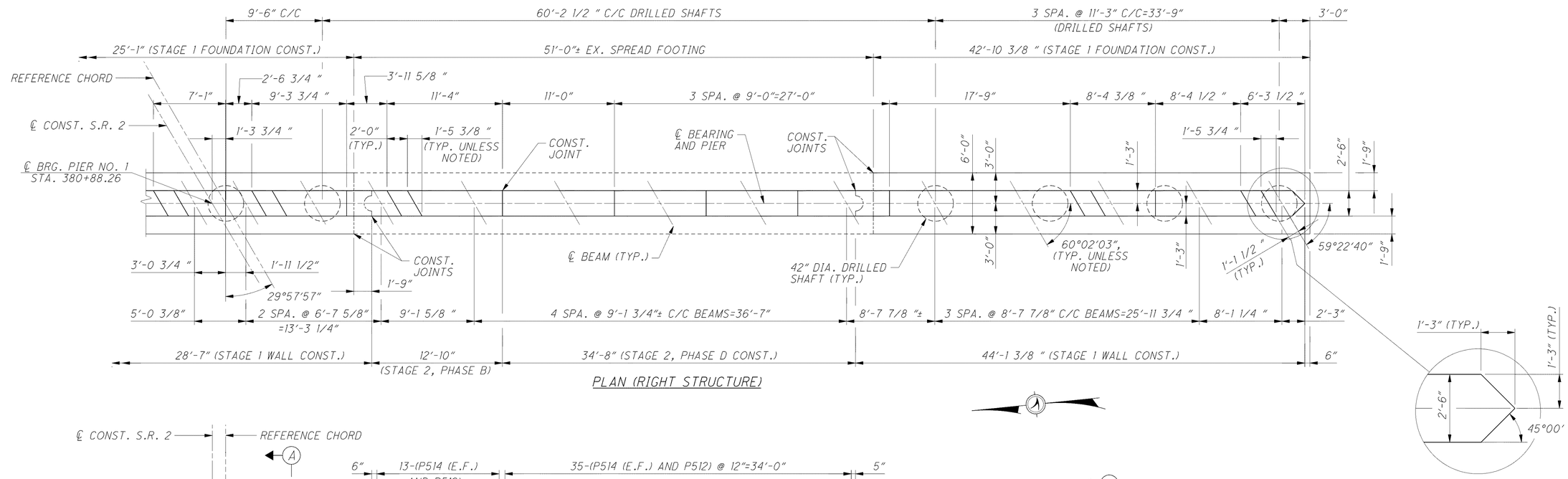

PLAN (RIGHT STRUCTURE)

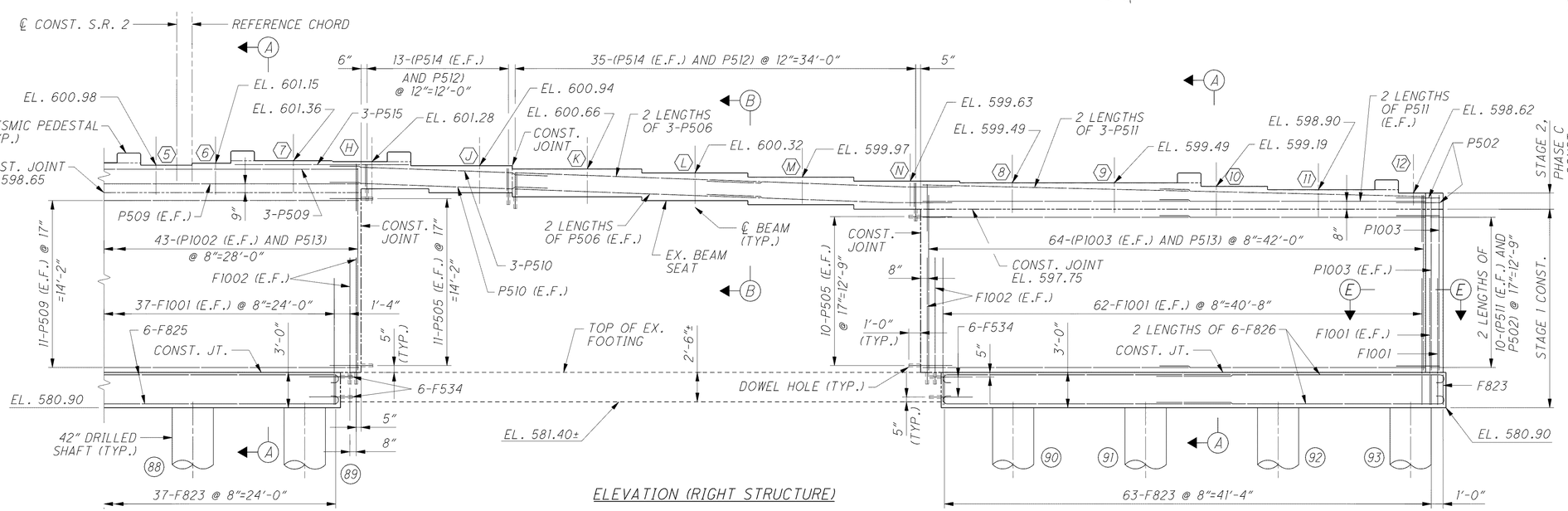

ELEVATION (RIGHT STRUCTURE)

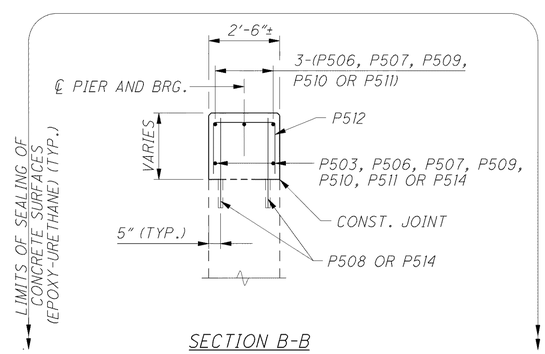

SECTION B-B

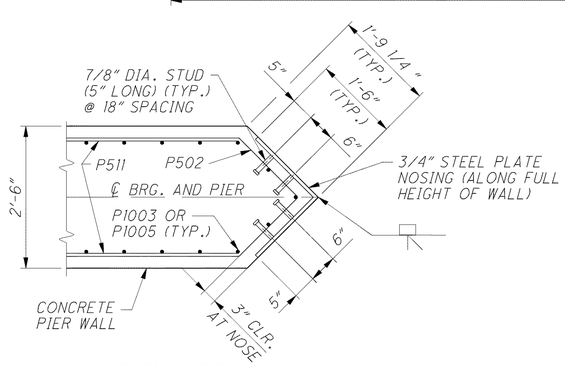

SECTION E-E

NOTES

1. ALL DIMENSIONS ARE MEASURED ALONG CENTERLINE OF PIER.
2. FOR SECTION A-A SEE SHEET 24/56.
3. FOR LEGEND OF ABBREVIATIONS SEE SHEET 4/56.
4. FOR BEARING DETAILS SEE SHEET 28/56.
5. FOR SEISMIC PEDESTAL DETAILS SEE SHEET 26/56.
6. MINIMUM BAR LAPS ARE AS FOLLOWS:
   #5 BAR = 38" #8 BAR = 87" #10 BAR = 123"
7. DO NOT APPLY SEALER TO CONCRETE SURFACES UNDER THE BEARING LOCATION.
8. STEEL PLATE NOSING SHALL BE INCLUDED WITH ITEM 511, CLASS HP CONCRETE, SUBSTRUCTURE, AS PER PLAN FOR PAYMENT.

DESIGN AGENCY
ARCADIS
ARCADIS G&M of Ohio, Inc.
1100 Superior Avenue, Suite 1250 Cleveland, Ohio 44114
Tel: 216-781-6177 Fax: 216-781-6243 www.arcadis-us.com

DESIGNED	DRAWN	REVIEWED	DATE
JL	MLF	FJG	12/07
CHECKED	REVISED	STRUCTURE FILE NUMBER	
JMA		4300750 (L) 4300785 (R)	

PIER 1 PLAN AND ELEVATION
BRIDGE NO. LAK-2-0530 L&R
STATE ROUTE 2 OVER CHAGRIN RIVER

LAK-2-3.32
PID 13486

G:\Project\CV000048A001\Drawing\LAK\13486\bridge\LAK002_0530L\sheets\002_0530CP1002.dgn 6/24/2008 5:09:35 PM mbechter