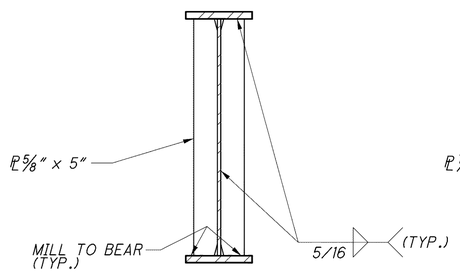

ABUTMENT BEARING STIFFENER PLATES

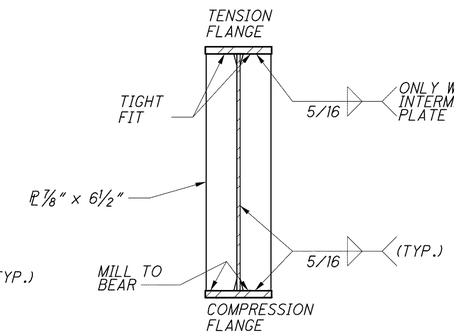

PIER BEARING STIFFENER PLATES

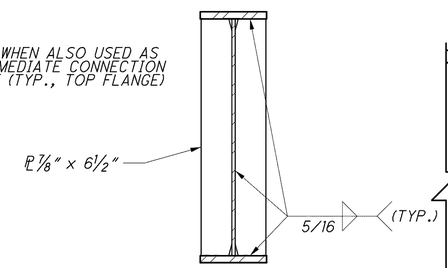

CONNECTION PLATES

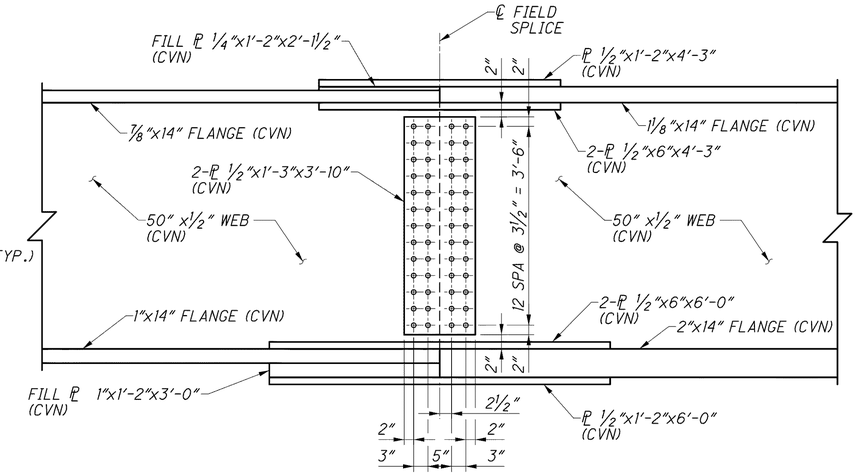

WEB SPLICE

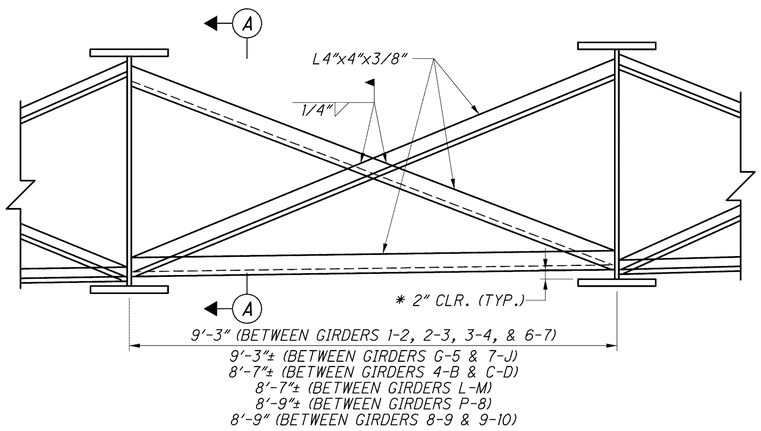

TYPE 1 INTERMEDIATE CROSSFRAME

* ADJUST AS REQUIRED AT SEISMIC PEDESTAL LOCATIONS

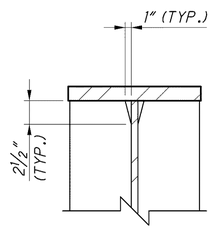

PLATE CLIP DETAIL

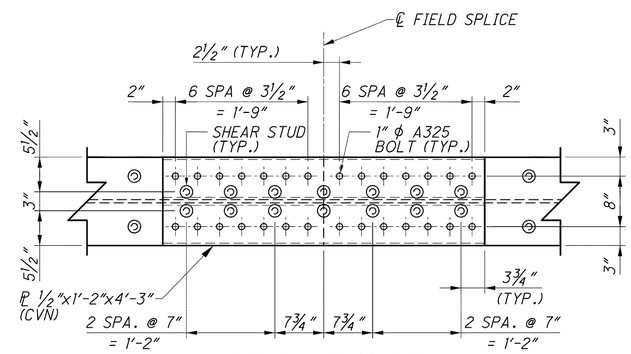

TOP FLANGE SPLICE

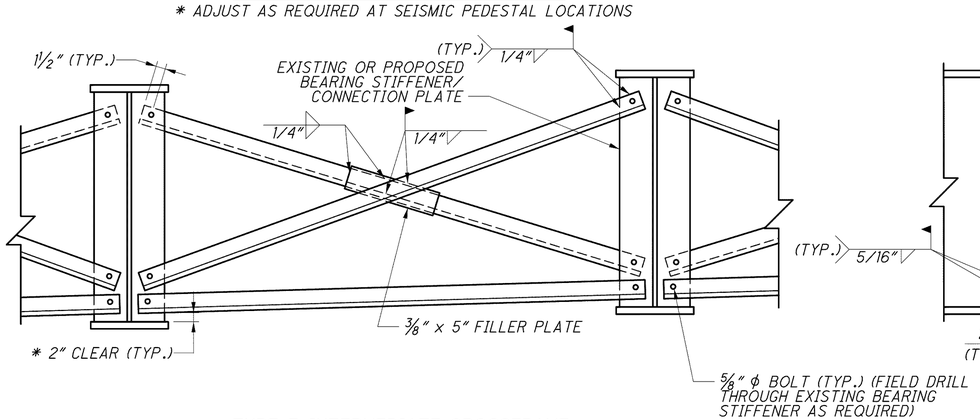

TYPE 3 INTERMEDIATE CROSSFRAME

* ADJUST AS REQUIRED AT SEISMIC PEDESTAL LOCATIONS

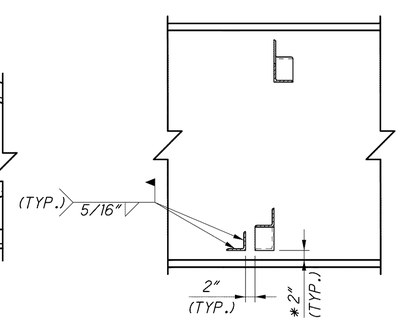

SECTION A-A

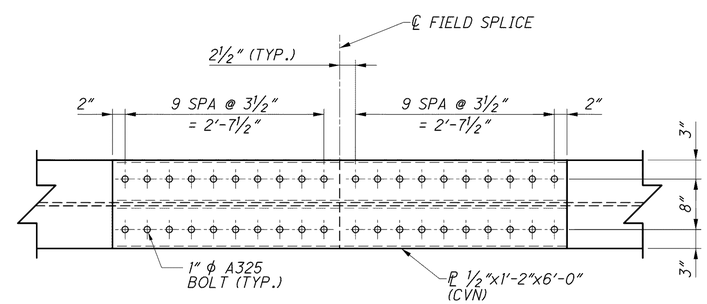

BOTTOM FLANGE SPLICE

NOTES

1. CVN: WHERE A SHAPE OR PLATE IS DESIGNATED (CVN), FURNISH MATERIAL THAT MEETS THE MINIMUM NOTCH TOUGHNESS REQUIREMENTS AS SPECIFIED IN 711.01.
2. FOR LIST OF ABBREVIATIONS, SEE SHEET 4/67.
3. HIGH STRENGTH BOLTS SHALL BE 1" DIAMETER A325 UNLESS OTHERWISE NOTED.
4. FOR LOCATIONS OF TYPE 3 CROSSFRAMES, SEE SHEETS 36/67 & 37/67.
5. PRIOR TO WELDING NEW ATTACHMENTS TO EXISTING STEEL, THE CONTRACTOR SHALL REMOVE EXISTING PAINT IN THE AREA THE ATTACHMENT IS TO BE CONNECTED. PAYMENT FOR THIS SURFACE PREPARATION SHALL BE INCLUDED WITH ITEM 514, SURFACE PREPARATION OF EXISTING STEEL.

DESIGN AGENCY
PARSONS BRINCKERHOFF QUADE & DOUGLAS, INC.
614 W. SUPERIOR AVE., SUITE 400
CLEVELAND, OHIO 44113

DESIGNED	DRAWN	REVIEWED	DATE
BMG	NAL	RJO	6-19-08
CHECKED	REVISED	STRUCTURE FILE NUMBER	
PWP		4300572(L) 4300602(R)	

GIRDER DETAILS I
BRIDGE NO. LAK-2-0400 L&R
STATE ROUTE 2 OVER VINE STREET

LAK-2-3.32
PID No. 13486

J:\LAK\13486\bridge\LAK002_0400C\sheets\002_0400CSD009.dgn 03-JUL-2008 1:45PM lintn