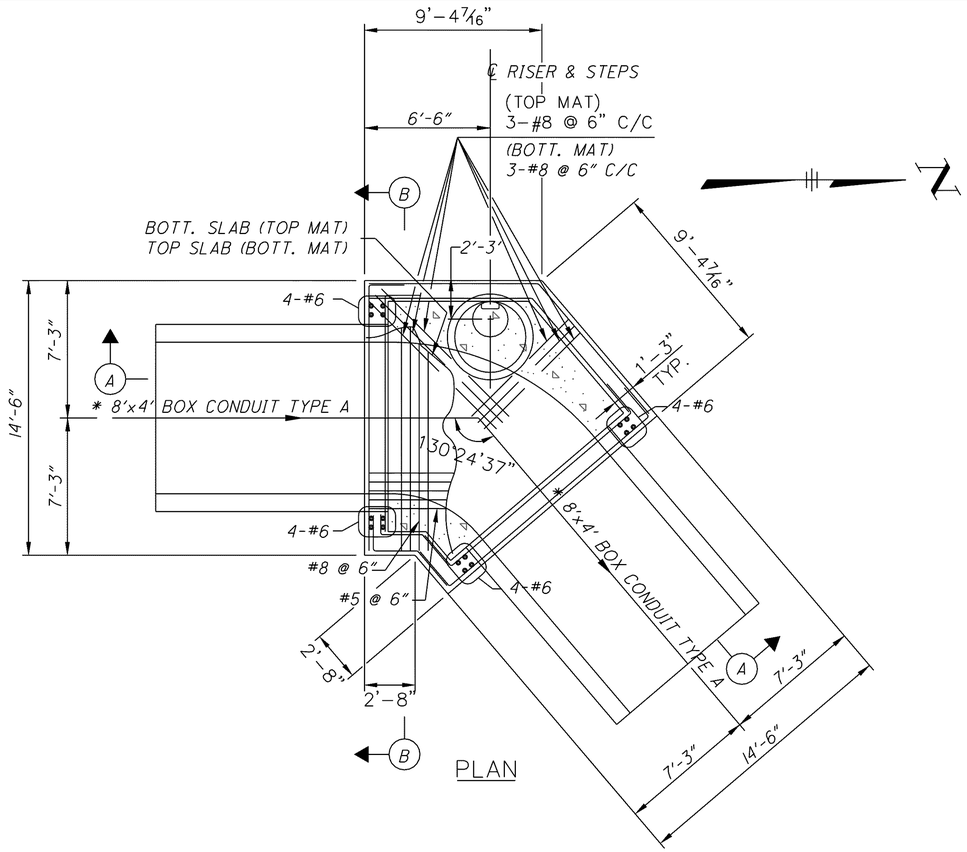

PLAN

NOTES

1. FOR LOCATION OF JUNCTION CHAMBER, SEE PLAN AND PROFILE SHEET 862
2. EXISTING DRAINS ARE TO BE TIED INTO THE JUNCTION CHAMBER. LOCATIONS AND ELEVATIONS TO BE VERIFIED IN THE FIELD PRIOR TO CONSTRUCTION OF THE JUNCTION CHAMBER.
3. SHALL BE SUBMITTED TO THE ENGINEER FOR APPROVAL PRIOR TO CONSTRUCTION.
4. AN APPROVED TYPE OF MECHANICAL CONNECTOR FOR REINFORCING BARS SHALL BE PROVIDED. INSTALLATION OF CONNECTORS SHALL CONFORM WITH MANUFACTURER'S RECOMMENDED PROCEDURES. CONNECTORS SHALL BE EPOXY COATED. CONNECTORS SHALL CONFORM WITH ITEM 509 AND BE INCLUDED IN THE BID PRICE FOR ITEM 604, JUNCTION CHAMBER, AS PER PLAN.

LEGEND:

(A) TYPE A WATERPROOFING (512) APPLIED TO THE TOP OF THE CHAMBER AND ON THE OUTSIDE WALL SURFACES OF THE CHAMBER.

(B) TYPE B WATERPROOFING (512) APPLIED TO INTERSECT OF MANHOLE RISER AND TOP OF CHAMBER ROOF. USE 1'-6" FABRIC WIDTH.

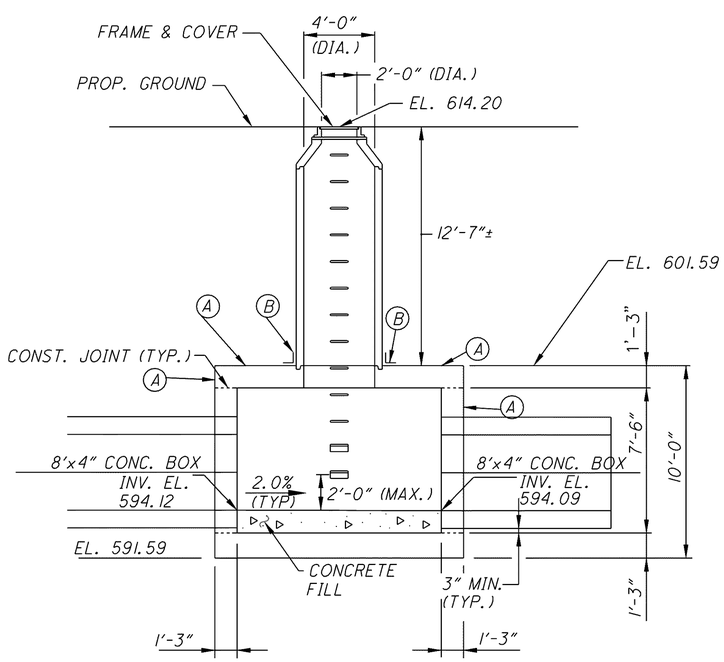

SECTION A–A

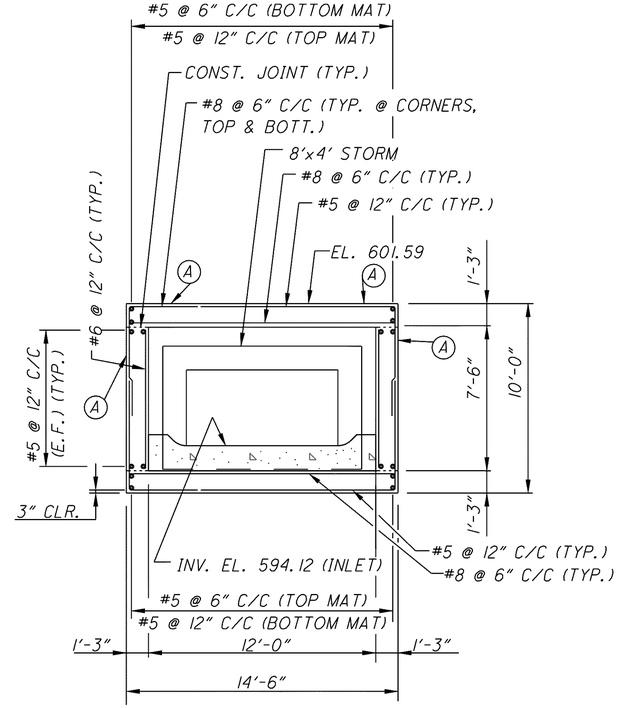

SECTION B–B

CALCULATED CAP
CHECKED PSB

JUNCTION CHAMBER DETAILS

LAK-2-3.32

863
1679

G:\Project\lak\13486\drainage\sheets\13486DC11B.dgn 6/24/2008 12:32:37 PM chanerman