℄ CONSTRUCTION

ITEM 202 PAVEMENT REMOVED

UNDERCUT

NOTES:

SPECIAL BENCHING LIMITS SHOWN ARE APPROXIMATE.
FIELD ENGINEER SHALL DETERMINE ACTUAL DIMENSIONS
AND LOCATIONS PER ODOT GEOTECHNICAL BULLETIN GB2.

CUT/FILL TOTALS INCLUDE SPECIAL BENCHING.
PORTION ATTRIBUTED TO UNDERCUT SHOWN IN [ ].
PORTION ATTRIBUTED TO SPECIAL BENCHING SHOWN IN < >.

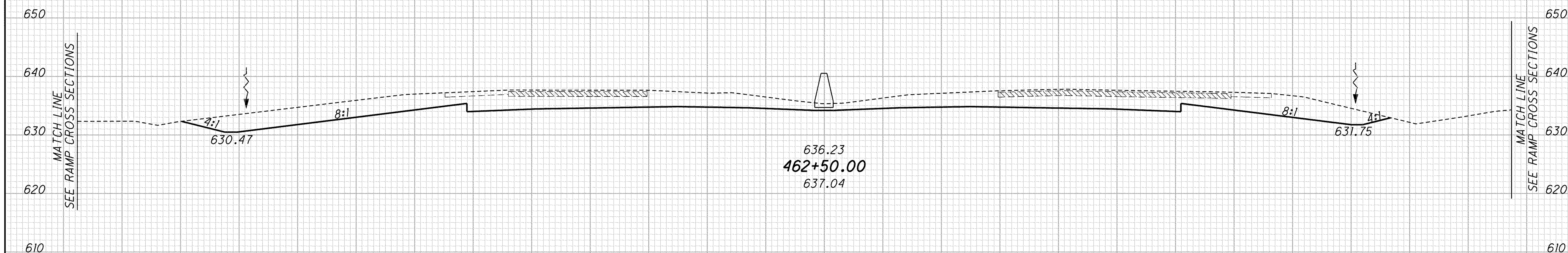

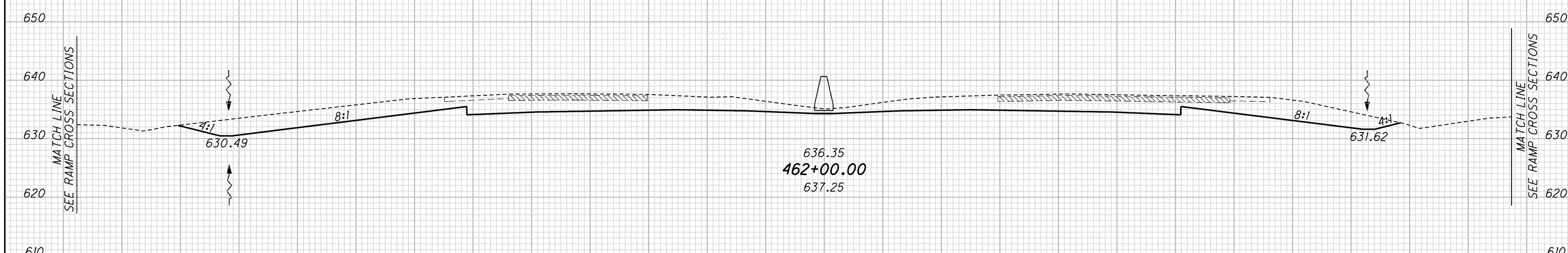

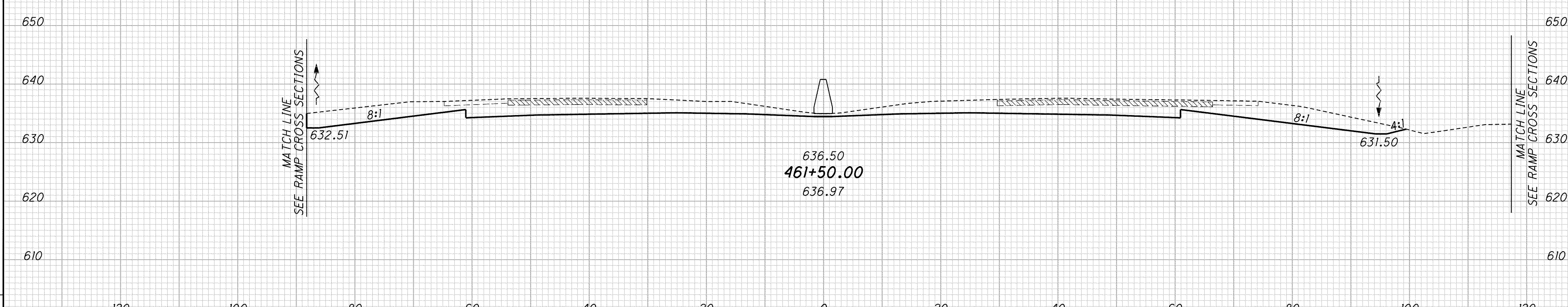

SEEDING END WIDTH	SEEDING SQ. YDS.	END AREA CUT	END AREA FILL	VOLUME CUT	VOLUME FILL
	481				
87		468			
	492			838	
90		437			
	439			724	
68		345			
				560	
	1412			2122	

CALCULATED DES | CHECKED PSB

CROSS SECTIONS
STA. 461+50 TO STA. 462+50

LAK-2-3.32

G:\Project\lak\13486\roadway\sheets\13486xs001.dgn 6/27/2008 8:13:48 AM chaneman