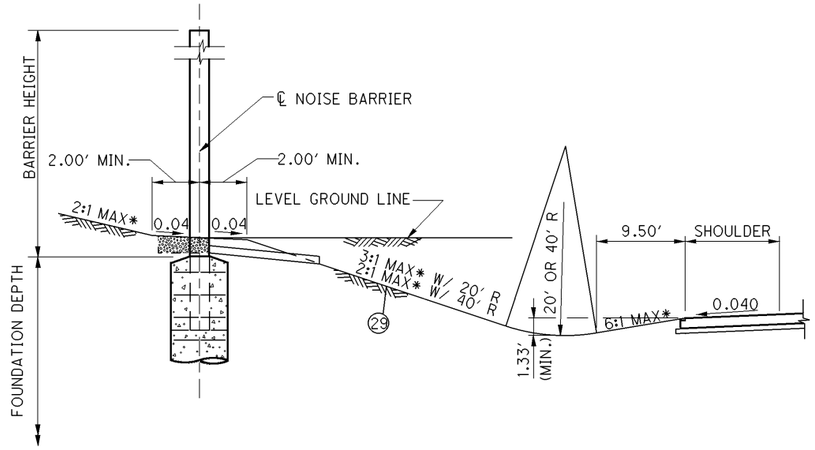

NOISE BARRIER GRADING
TOP OF CUT SLOPE

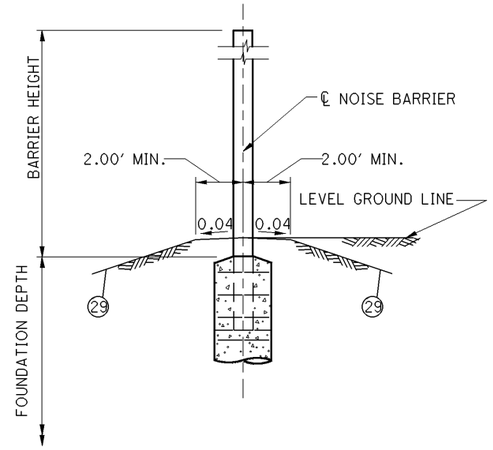

NOISE BARRIER GRADING
FILL SLOPE (OUTSIDE CLEAR ZONE)

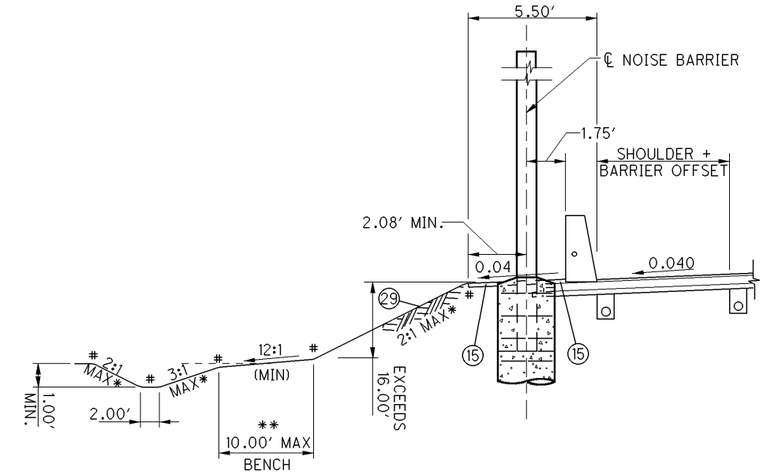

NOISE BARRIER GRADING
FILL SLOPE NEAR SHOULDER

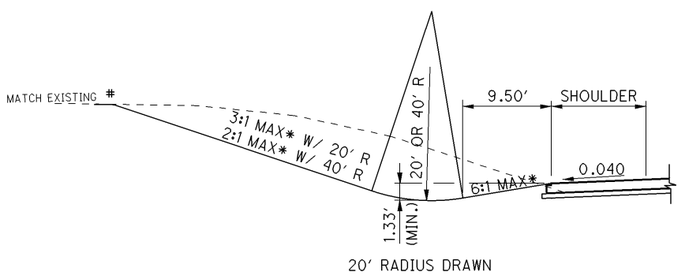

CUT GRADING SECTION

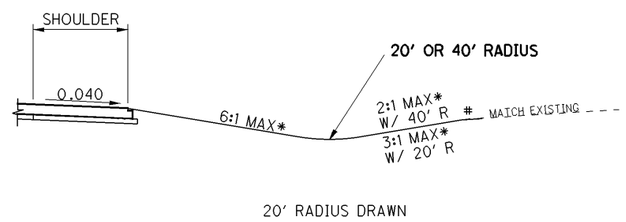

SHALLOW CUT OR LOW FILL GRADING SECTION

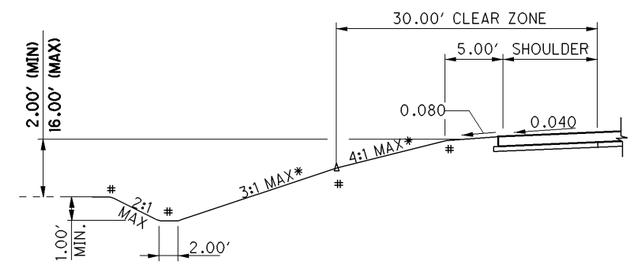

MEDIUM FILL GRADING SECTION

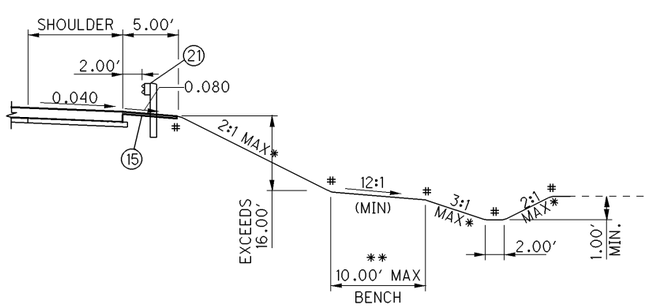

BARRIER GRADING SECTION

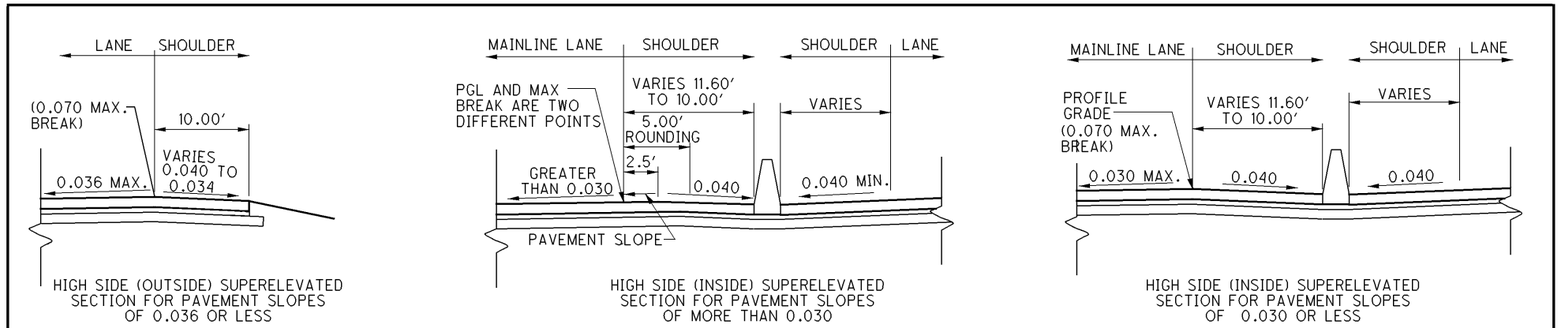

SHOULDER CROSS SLOPE DETAIL

* OR AS SHOWN IN THE CROSS SECTIONS
** SEE CROSS SECTIONS FOR BENCH WIDTHS
\# 4 FT. ROUNDING

TYPICAL SECTIONS S.R. 2 MAINLINE GRADING (CONCRETE ALTERNATIVE)

LAK-2-3.32

29C
1679

I:\PROJECTS\Pid13486\Addendum\Alternate bid\13486GYP03.dgn 18-NOV-2008 2:10PM jgrmovse