MICROFILMED
JUL 9 1986

FED. RD. DIVISION	STATE	PROJECT	
2	OHIO		

351/384

LAKE COUNTY
SEC. LAK-2-14.22

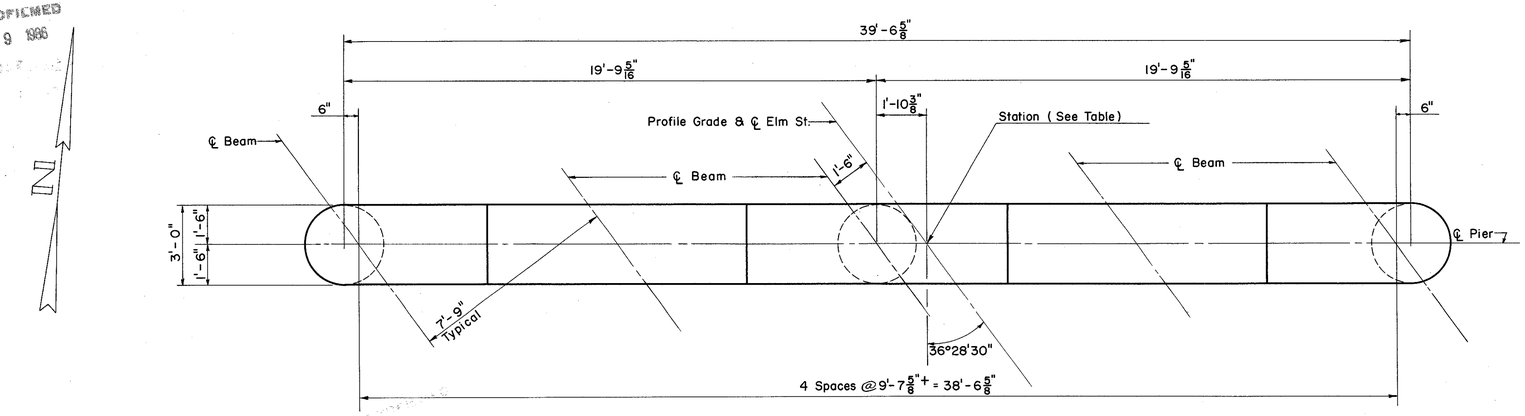

CAP PLAN
(TYPICAL ALL PIERS)

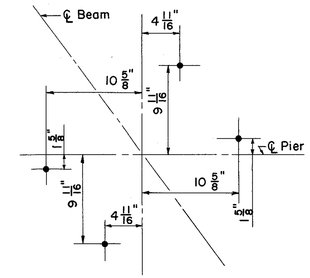

ANCHOR BOLT LAYOUT
(PIER NO. 2)

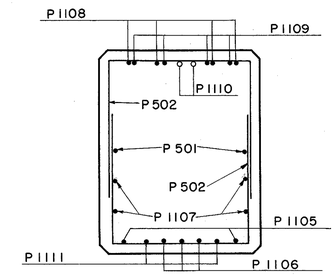

SECTION A-A

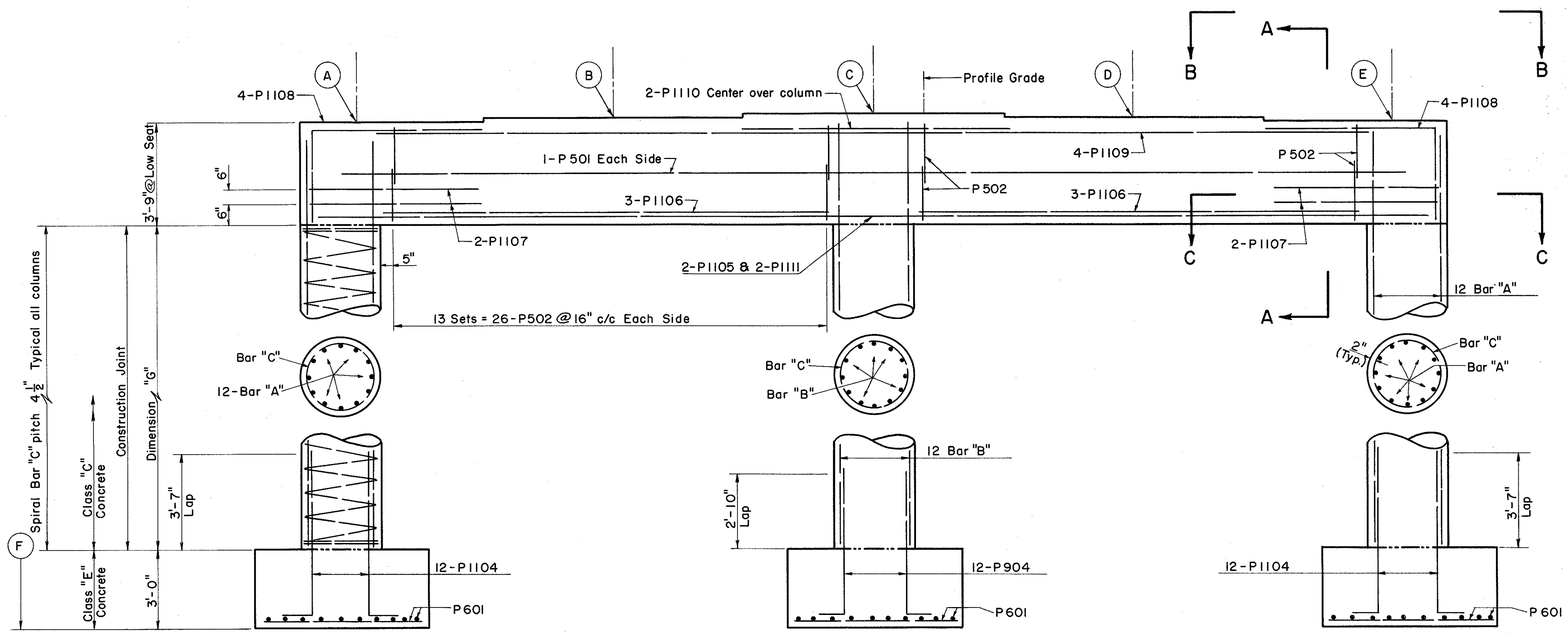

ELEVATION
(TYPICAL ALL PIERS)

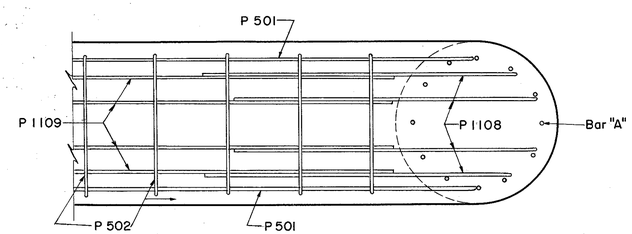

SECTION B-B

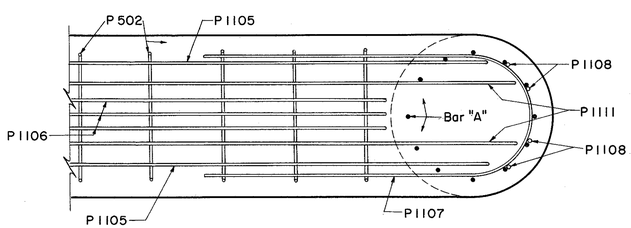

SECTION C-C

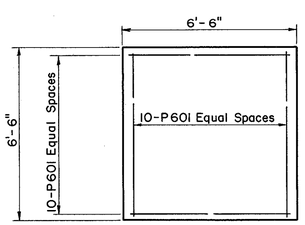

FOOTING PLAN
(TYPICAL)

LOCATION		ELEVATIONS							BARS		
PIER	STATION	A	B	C	D	E	F	DIMENSION "G"	A	B	C
1	29+21.59	628.72	628.86	629.02	628.95	628.85	602.00	19'-11 5/8"	P 1101	P 901	SP 401
2	30+02.59	628.25	628.41	628.58	628.54	628.46	602.00	19'-6"	P 1102	P 902	SP 402
3	30+79.59	627.74	627.92	628.11	628.08	628.01	602.00	18'-11 7/8"	P 1103	P 903	SP 403

NOTES:

All reinforcing shall have 3" of cover in the footing and 2" elsewhere.

The Pier Cap shall be stepped at the mid point between beams.

All piers are identical except as shown.

Special care shall be taken in placing the reinforcing steel in the cap on pier No. 2 so it does not interfere with the drilling of Anchor Bolt Holes.

Footings shall extend a minimum of 3" into solid shale or to the elevation shown whichever is lower.

PREPARED BY
CAPITOL ENGINEERING ASSOCIATES, DILLSBURG, PA.
FOR

STATE OF OHIO
DEPARTMENT OF HIGHWAYS
DIVISION OF DESIGN AND CONSTRUCTION
BUREAU OF BRIDGES

PIERS
BRIDGE NO. LAK-2-15.93
RELOC. S. R. 2 UNDER ELM STREET
LAKE COUNTY
STA. 741 + 03.27

DESIGNED	DRAWN	TRACED	CHECKED	REVIEWED	DATE	REVISED
DRT	DRT	S.W.B.	SWM by DRT CES			