MICROFILMED
JUL 9 1986

FED. RD. DIVISION	STATE	PROJECT	
2	OHIO		

325
384

LAKE COUNTY
SEC. LAK-2-14.22

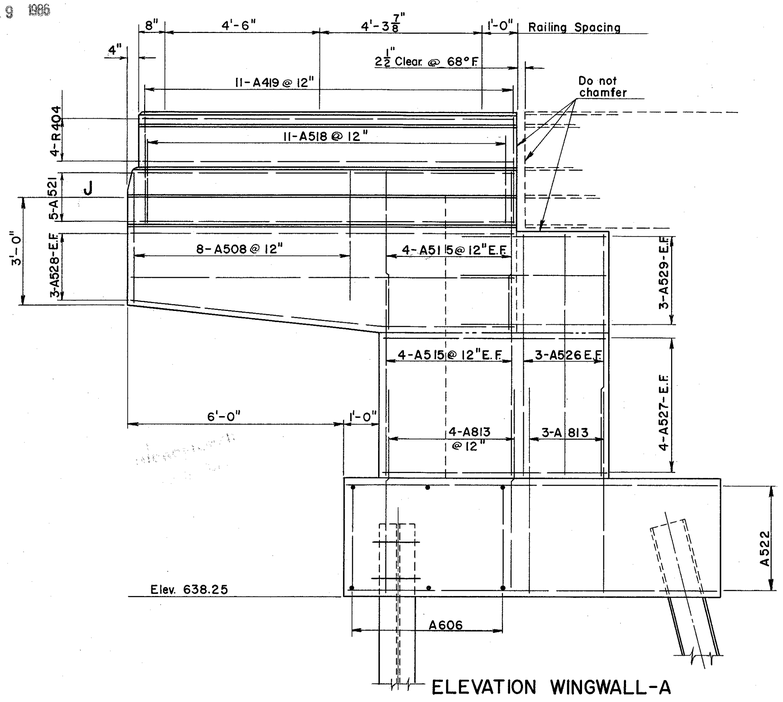

ELEVATION WINGWALL-A

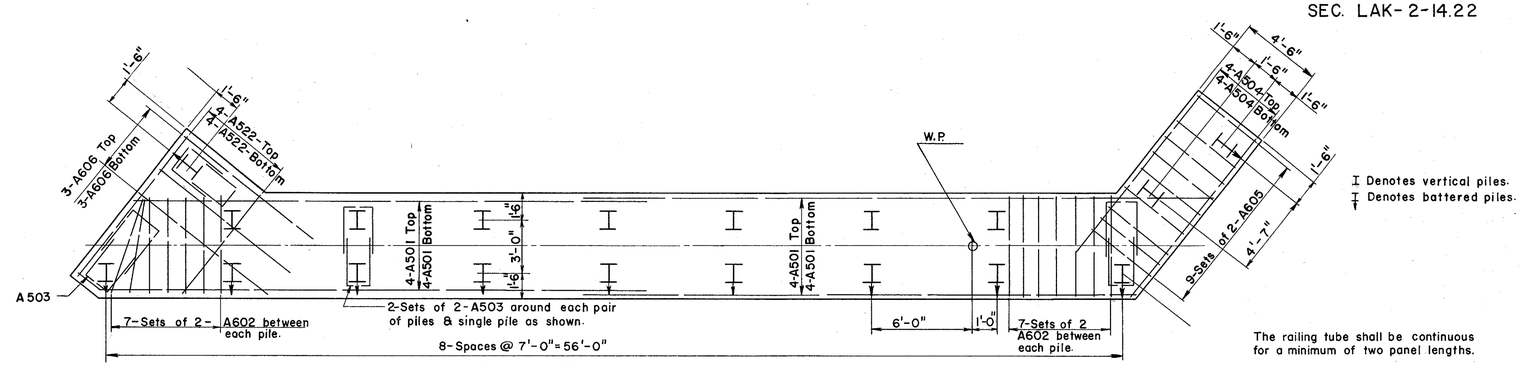

The railing tube shall be continuous for a minimum of two panel lengths.

PILE LAYOUT
All Abutments

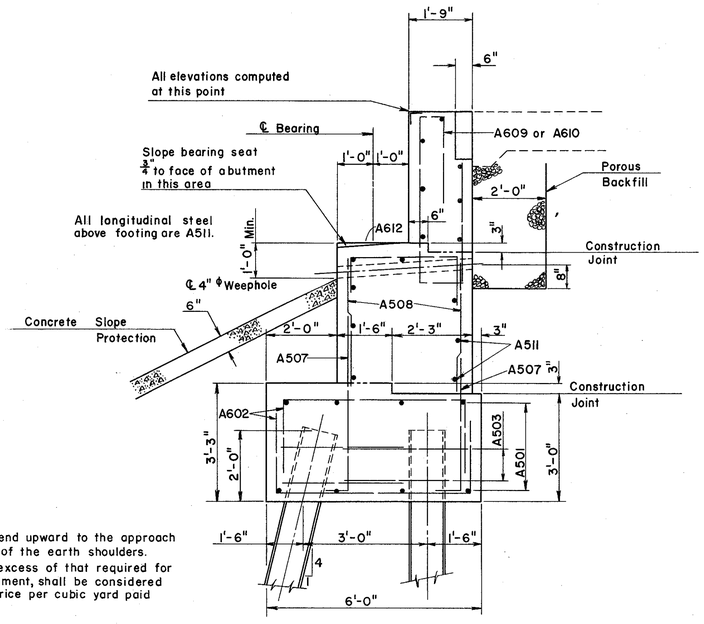

ABUTMENT SECTION

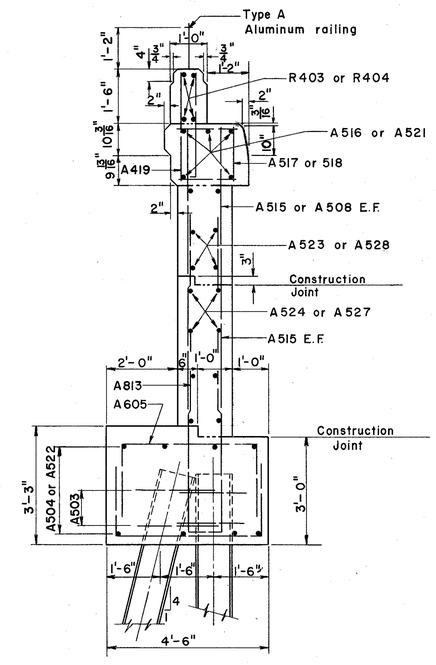

WINGWALL SECTION

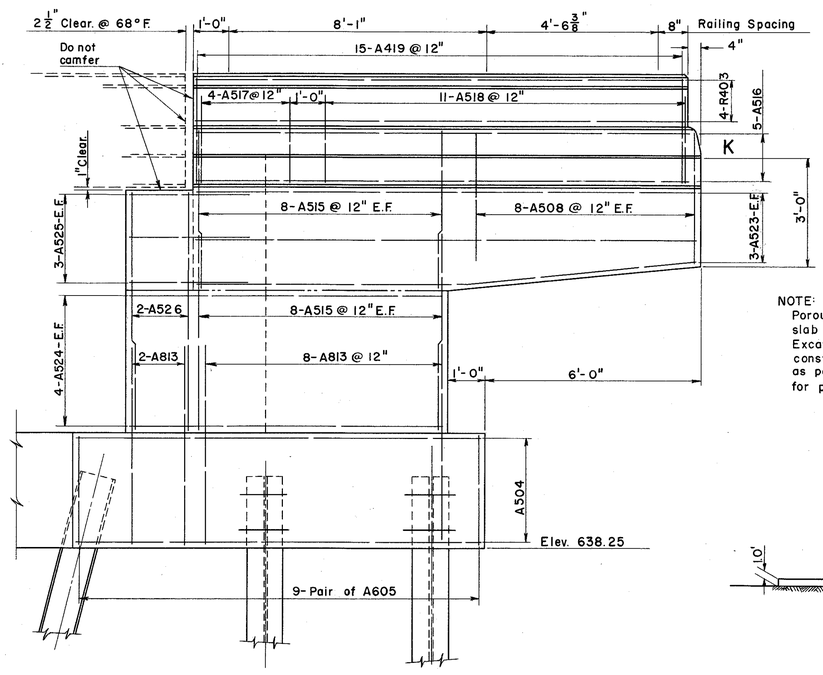

ELEVATION WINGWALL-B

NOTE:
Porous backfill shall extend upward to the approach slab and to the surface of the earth shoulders. Excavation therefore, in excess of that required for construction of the abutment, shall be considered as paid for in the bid price per cubic yard paid for porous backfill.

NOTE:
Top of concrete slope protection at face of abutment on straight line with slope as shown.

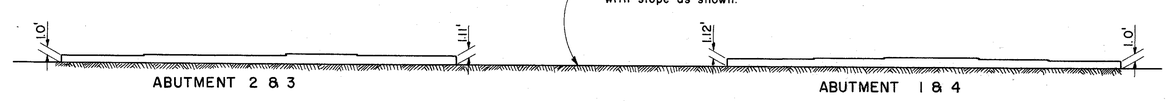

CONCRETE SLOPE PROTECTION

PREPARED BY
CAPITOL ENGINEERING ASSOCIATES, DILLSBURG, PA.
FOR

STATE OF OHIO
DEPARTMENT OF HIGHWAYS
DIVISION OF DESIGN AND CONSTRUCTION
BUREAU OF BRIDGES

ABUTMENT DETAILS
BRIDGE NO. LAK-2-1512 L & R
RELOC. S. R. 2 OVER SANFORD STREET
LAKE COUNTY

STA. 699+08.63

DESIGNED	DRAWN	TRACED	CHECKED	REVIEWED	DATE	REVISED
		J.D.M. G.M.Y.	McC			