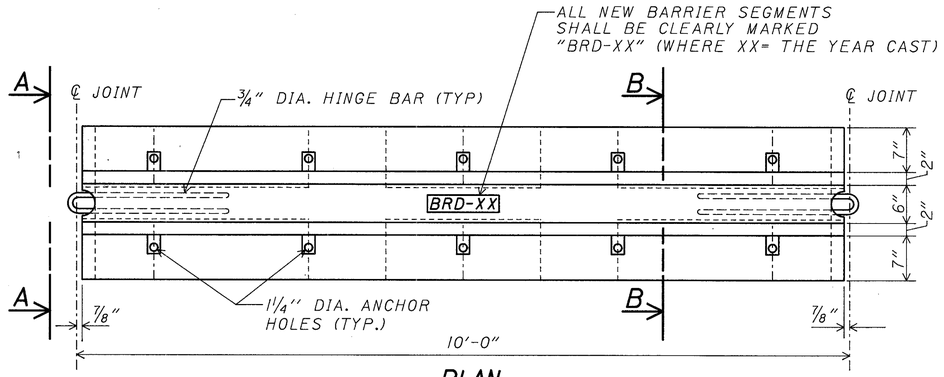

PLAN

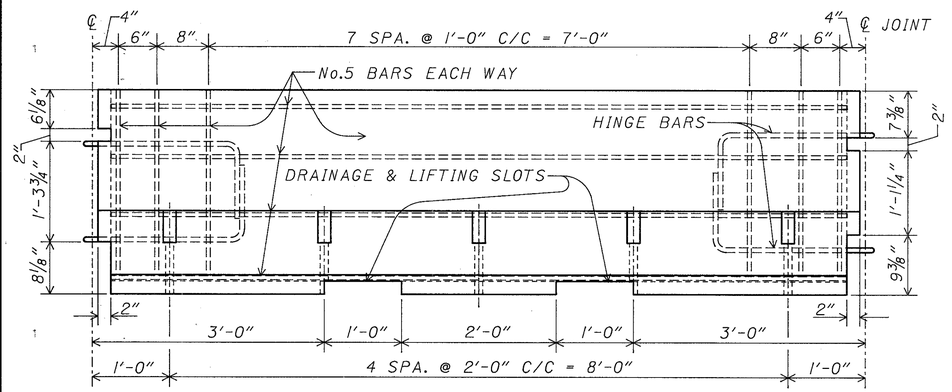

ELEVATION

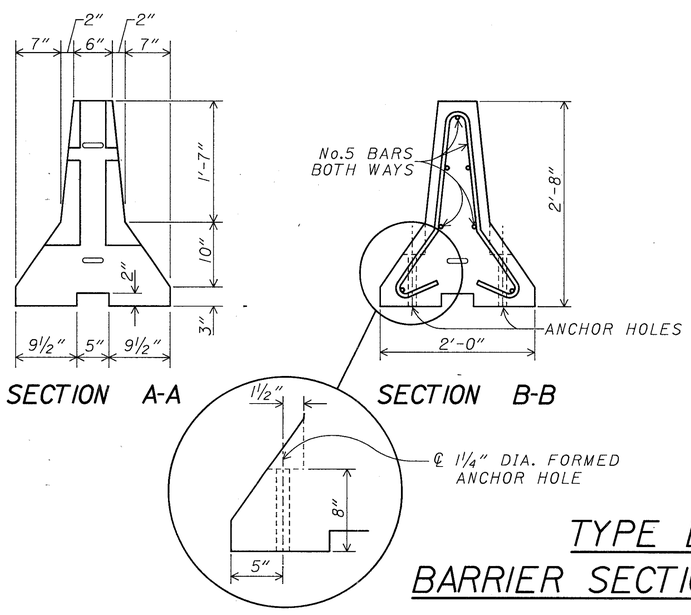

TYPE BRD BARRIER SECTIONS

MATERIAL REQUIREMENTS:

1. THE CONCRETE SHALL HAVE A MINIMUM COMPRESSIVE STRENGTH OF 4000 PSI. AND SHALL CONTAIN A CALCIUM NITRITE CORROSION INHIBITING ADMIXTURE. THE ADMIXTURE SHALL BE ADDED TO THE CONCRETE AT THE RATE OF 4.0 GALLONS PER CUBIC YARD OF CONCRETE AND SHALL BE ADDED AS AN AQUEOUS SOLUTION, SUCH AS W.R. GRACE'S DCI CORROSION INHIBITOR (30% SOLIDS) OR APPROVED EQUAL. THE WATER IN SUCH SOLUTION SHALL BE COUNTED AS MIXING WATER FOR THE PURPOSE OF DETERMINING THE WATER TO CEMENT RATIO OF THE CONCRETE. THE CALCIUM NITRITE MUST BE ADDED TO THE MIX IMMEDIATELY AFTER THE AIR-ENTRAINING AND RETARDING ADMIXTURES HAVE BEEN INTRODUCED TO THE BATCH.
2. ALL REINFORCING STEEL AND STEEL ROD CONNECTING LOOPS SHALL BE GRADE 60 REINFORCING STEEL WITH A MINIMUM YIELD STRENGTH OF 60,000 PSI.

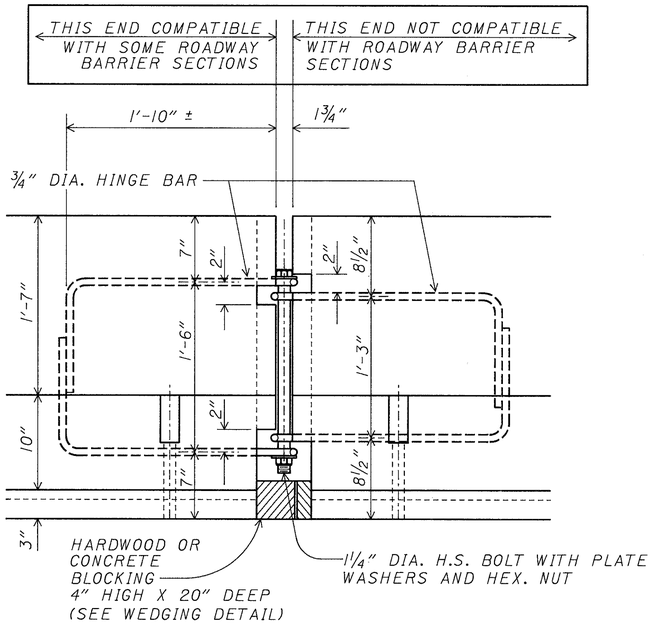

DETAIL AT HINGED CONNECTION

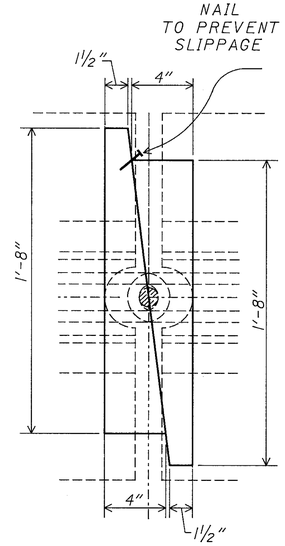

BARRIER WEDGING DETAIL (HARDWOOD)

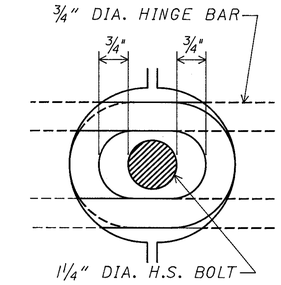

INITIAL JOINT

BARRIER SEGMENTS SHOULD INITIALLY BE PLACED CLOSER TOGETHER SO THAT BOLTS CAN BE EASILY INSERTED THROUGH HINGE BAR LOOPS.

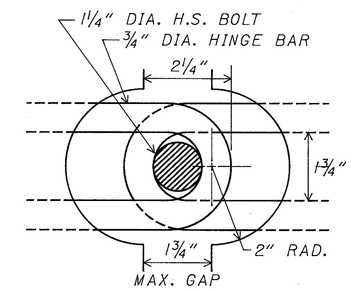

FINAL JOINT

BARRIER JOINTS MUST BE FULLY OPEN BEFORE OPENING IS BLOCKED WITH CONCRETE OR HARDWOOD.

CONCRETE BARRIER, TYPE BRD, ANCHORED

ALL ANCHORS SHALL BE 1" DIAMETER, HIGH STRENGTH, THRU BOLTS OR APPROVED RESIN ANCHORS. WHEN RESIN ANCHORS ARE USED, THEY MUST BE EMBEDDED A MINIMUM OF 6" INTO FIRM CONCRETE. THE NUMBER OF ANCHORS SHALL BE AS SHOWN BELOW AND SHALL BE PLACED SYMMETRICALLY ABOUT THE TRANSVERSE ℄ OF BARRIER SECTION ON THE ROADWAY SIDE OF THE BARRIER.

BRIDGE NO.	TRAFFIC CONTROL PHASE	NO. ANCHORS / 10' SECTION
LAK-2-0180 L&R		5
LAK-2-0363 L&R		5

COMMON NOTES:

ALL TEMPORARY CONCRETE BARRIERS ON STRUCTURES

BRIDGE DECK SURFACE PREPARATION

1. THE BRIDGE DECK SURFACE AREA ON WHICH THE PRECAST CONCRETE BARRIER SEGMENTS WILL REST SHALL BE CLEARED OF ALL LOOSE SAND, GRAVEL, DIRT AND DEBRIS.
2. ANY IRREGULARITIES IN THE BRIDGE DECK AREA, UNLESS JUDGED BY THE ENGINEER TO BE INCONSEQUENTIAL, SHALL BE LEVELED WITH GROUT AND/OR ASPHALT.
3. ASPHALT ROLL ROOFING SHALL BE PLACED ON THOSE BRIDGE DECK AREAS, AS JUDGED BY THE ENGINEER, TO HAVE A SURFACE ROUGHNESS WHICH WOULD INHIBIT FRICTION CONTACT BETWEEN BARRIER SEGMENTS AND DECK.

BOLTED JOINT CONNECTIONS

4. WHEN STANDARD MC-9A BARRIER SECTIONS OR TYPE BRD BARRIER SECTIONS ARE USED ON STRUCTURES, THEY SHALL BE BOLTED TOGETHER AND BLOCKED AS SHOWN ABOVE (BOLTING AND BLOCKING DIMENSIONS FOR MC-9A BARRIER MAY VARY FROM THOSE SHOWN).

COLPETZER-THOMAS, INC.
AN ENGINEERING GROUP
WILLOUGHBY • MENTOR • NORTH CANTON • STEUBENVILLE • LORAIN

37/78

PHASE CONSTRUCTION DETAILS
BRIDGE NO. LAK-2-0180 L & R
AND LAK-2-0363 L & R
LAKE COUNTY

DESIGNED	DRAWN	TRACED	CHECKED	REVIEWED	DATE	REVISED
ODOT	ODOT	ODOT	ODOT	ODOT	3/30/89	

ZFA2:[20000051BRDBAR1.DGN]