CALC. BY ___ DATE ___ / CHKD. BY ___ DATE ___	LAK–2–1.80 (L & R) LAK–2–3.63 (L & R) LAK–2–5.42, LAK–2–10.29	OHIO FHWA REGION 5	62 / 113

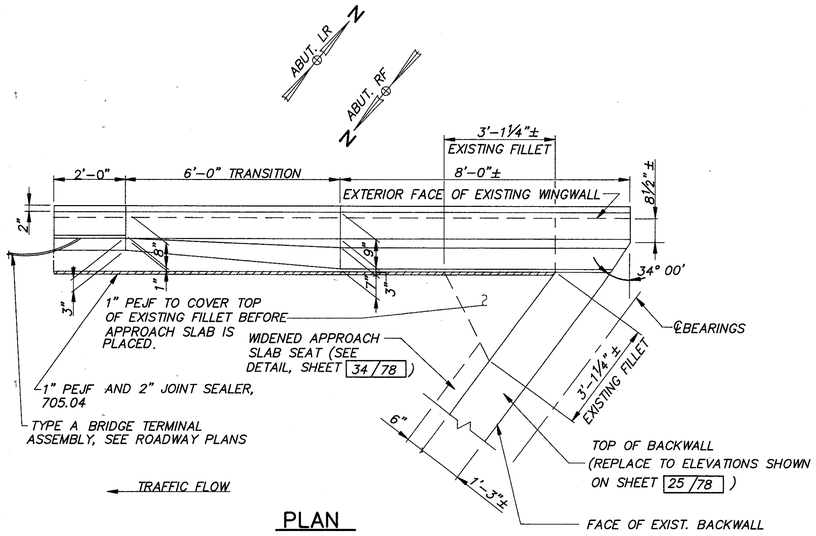

PLAN

PROPOSED PARPET ON OUTSIDE WINGWALL
(TYPICAL FOR ABUTMENTS LR & RF)

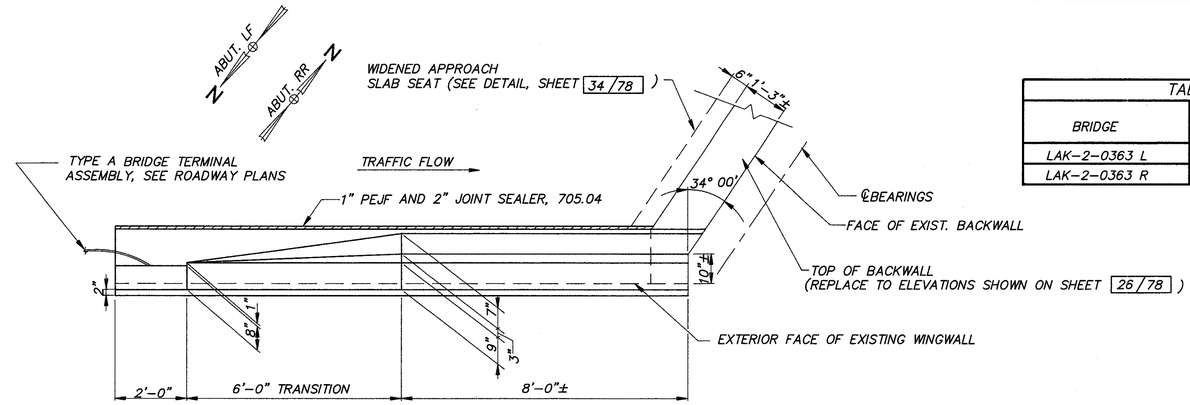

PLAN

PROPOSED PARPET ON OUTSIDE WINGWALL
(TYPICAL FOR ABUTMENTS RR & LF)

TABLE OF ELEVATIONS				
BRIDGE	LOCATIONS			
	A	B	C	D
LAK–2–0363 L	648.12±	648.21±	648.72±	648.69±
LAK–2–0363 R	648.49±	648.43±	647.48±	647.65±

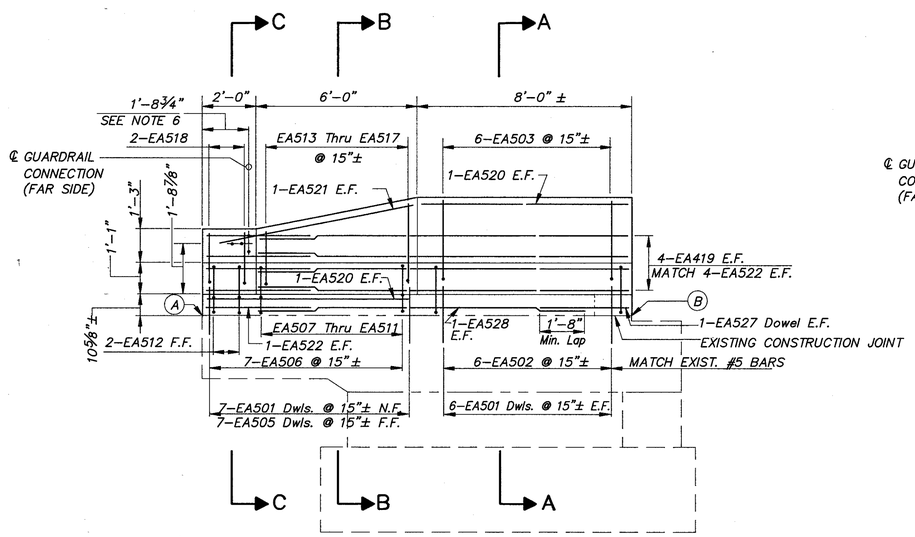

ELEVATION

PROPOSED PARAPET ON OUTSIDE WINGWALL
(TYPICAL FOR ABUTMENTS LR & RF)

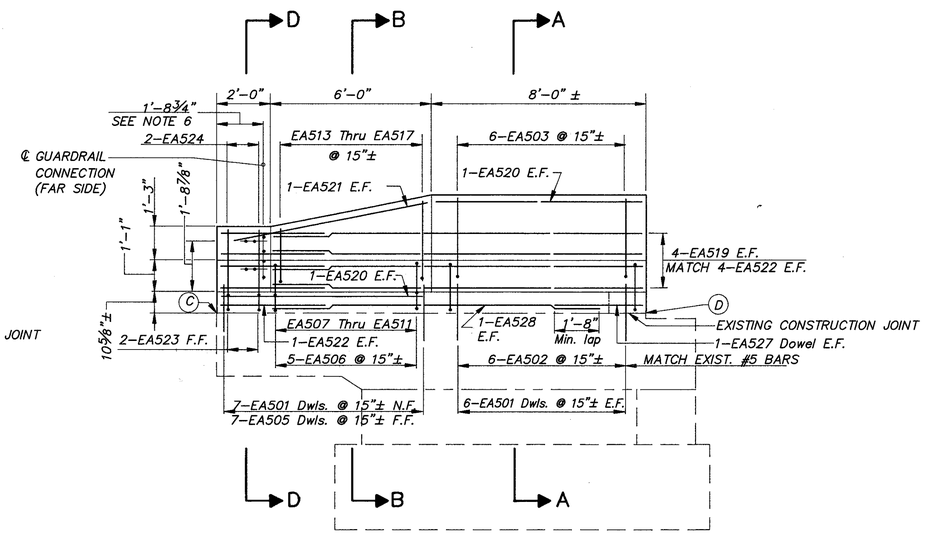

ELEVATION

PROPOSED PARAPET ON OUTSIDE WINGWALL
(TYPICAL FOR ABUTMENTS RR & LF)

NOTES:

1. OUTSIDE WINGWALLS ARE ADJACENT TO THE RIGHT DRIVING LANES.
2. FOR ABUTMENT LOCATIONS, SEE GENERAL PLAN ON SHEET 20/78.
3. FOR SECTION A–A SEE SHEET 29/78.
4. FOR SECTIONS B–B THRU D–D SEE SHEET, 30/78.
5. NOTATION:
   N.F.–NEAR FACE, F.F.–FAR FACE, E.F.–EACH FACE
   LR – LEFT REAR ABUTMENT.
   LF – LEFT FORWARD ABUTMENT.
   RR – RIGHT REAR ABUTMENT.
   RF – RIGHT FORWARD ABUTMENT.
   DWLS. – DOWELS.
   EXIST. – EXISTING
   PEJF – PREFORMED EXPANSION JOINT FILLER
6. FOR TYPE A GUARDRAIL TERMINAL CONNECTION, SEE DRAWING GR–3.

COLPETZER–THOMAS, INC.
AN ENGINEERING GROUP
WILLOUGHBY • MENTOR • NORTH CANTON • STEUBENVILLE • LORAIN

27/78

WINGWALL DETAILS

BRIDGE NO. LAK–2–0363 L & R OVER BEIDLER ROAD

LAKE COUNTY

DESIGNED	DRAWN	TRACED	CHECKED	REVIEWED	DATE	REVISED
J.P.R.	R.L.B. M.T.W.	R.L.B. M.T.W.	R.J.C.	J.E.A.	11/15/88	