FED. RD. DIVISION	STATE	PROJECT	
2	OHIO		

LAK-2 -0.02

136
141

NOTES:

OUTLINES

ALL OUTLINES SHALL BE TWO INCHES WIDE UNLESS SHOWN OTHERWISE ON THE LAYOUT.

CORNER RADIUS

CORNER RADIUS SHALL BE GOVERNED BY THE HORIZONTAL WIDTH DIMENSION OR THE VERTICAL DIMENSION OF THE SIGN, WHICHEVER IS SMALLER:
UP TO 2½' USE 3" CORNER RADIUS,
3' TO 4½' USE 6" CORNER RADIUS,
5' TO 6½' USE 9" CORNER RADIUS,
7' AND UP USE 12" CORNER RADIUS.

ARROWS

ALL DIAGONAL ARROWS SHALL BE PLACED AT 45° UNLESS SPECIFIED OTHERWISE ON THE LAYOUT. DETAILS OF ARROWS A-1, B-1, C-1, A-5, B-5, C-5, ETC. ARE SHOWN ON SIGN DESIGN SHEET 1A.

MARKERS

DETAILS OF ROUTE MARKERS SUCH AS M-1C-36-2, M-2C-36-2, M-5C-36-2, ETC. ARE SHOWN ON THE SIGN DESIGN SHEETS HAVING THE CORRESPONDING CODE NUMBERS.

LETTERING

LETTERING SHOWN AS "U.C." AND "L.C." INDICATES "UPPER CASE INTERSTATE" AND "LOWER CASE INTERSTATE" RESPECTIVELY. LETTERING SHOWN AS "E" INDICATES "E SERIES".

DIMENSIONING

DIMENSIONING SUCH AS A ←21→ ←4→ B SHALL BE INTERPRETED AS BEING ACCUMULATIVE, THE DISTANCE FROM POINT A TO POINT B, IN THIS EXAMPLE, BEING 25 INCHES. ALL DIMENSIONS GIVEN ON THE LAYOUTS ARE IN INCHES UNLESS OTHERWISE SHOWN.

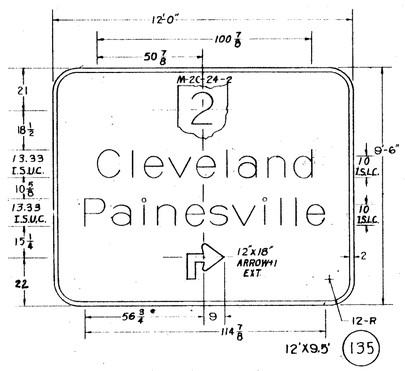

SEE DESIGN NO. 5b (136a)

SEE DESIGN NO. 27b (136b)

SEE DESIGN NO. 30 (137a)

SEE DESIGN NO. 46 (137b)

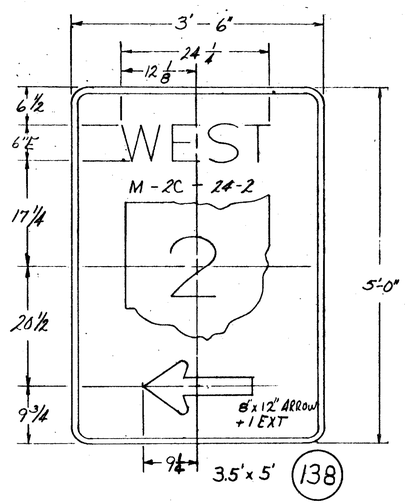

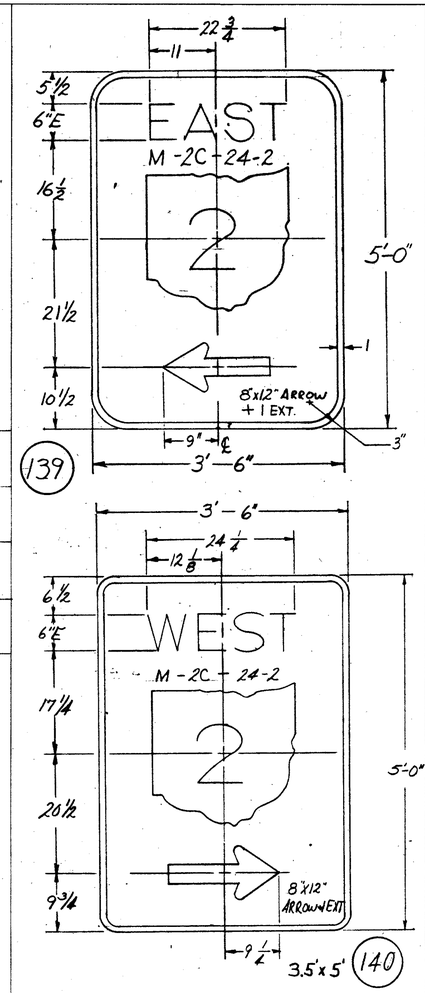

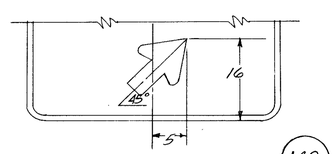

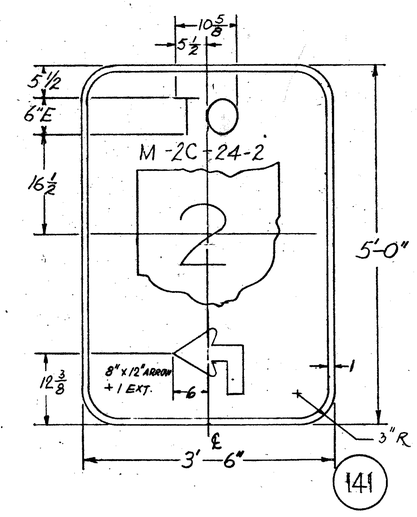

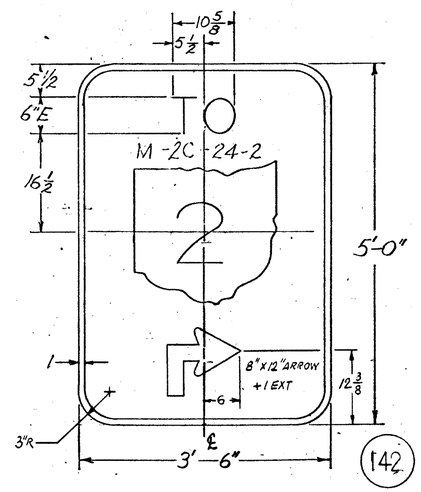

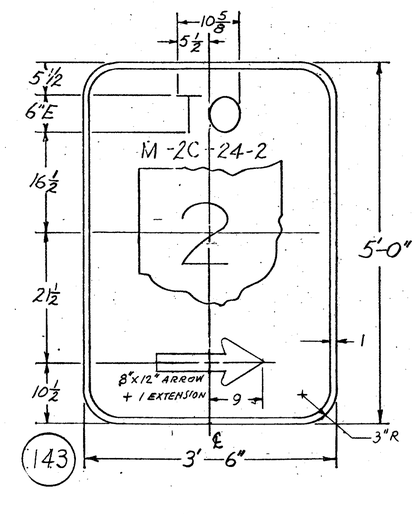

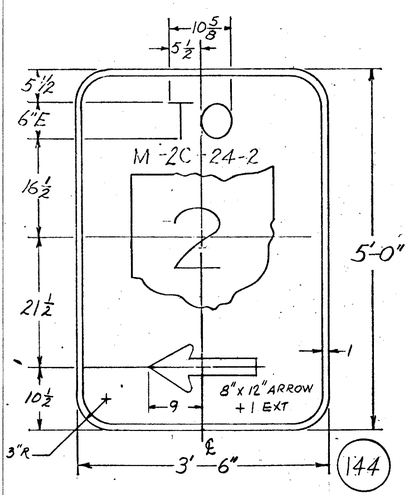

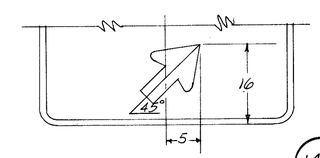

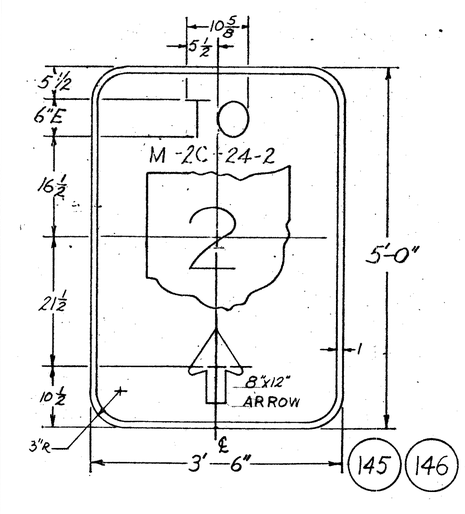

SEE DESIGN NO. 30 (147)

SEE DESIGN NO. 140 (148)

SEE DESIGN NO. 144 (149)

		C		l		e		v		e		l		a		n		d										13.33"UC 10"LC LENGTH 100 7/8
		10.62	4.50	2.63	4.00	8.62	2.88	10.62	2.63	8.62	4.25	2.63	4.00	8.62	5.13	8.50	4.00	8.62										
P		a		l		n		e		s		v		i		l		l		e								13.33"UC 10"LC LENGTH 114 7/8
9.75	3.25	8.62	5.13	2.62	5.13	8.50	4.00	8.62	2.88	8.62	2.63	10.62	3.75	2.63	5.12	2.63	5.12	2.63	4.00									
							W		E		S		T															6"E LENGTH 24 1/4
							6.25	2.00	4.25	1.50	4.75	1.25	4.25															
							E		A		S		T															6"E LENGTH 22 3/4
							4.25	1.50	5.25	1.50	4.75	1.25	4.25															
								T		O																		6"E LENGTH 10 5/8
								4.25	1.37	5.00																		
																												LENGTH