MICROFILMED
SEP 18 1985

FED. RD. DIVISION	STATE	PROJECT	
2	OHIO		

366
394

LAK-2-0.00

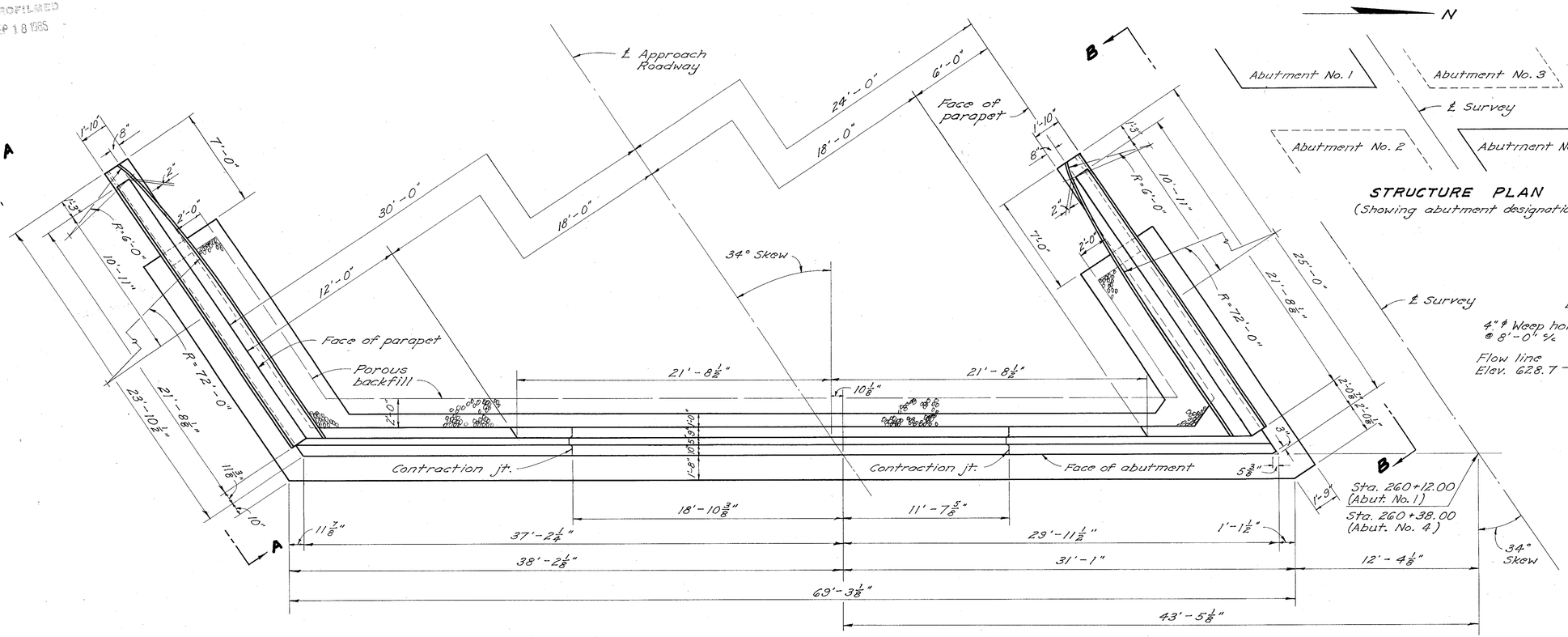

ABUTMENT PLAN
(Abutments No. 1 and No. 4)

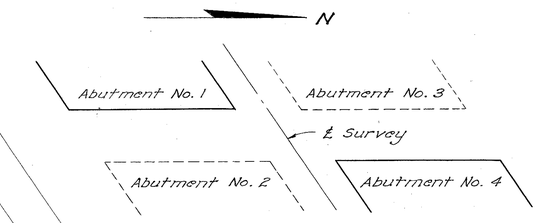

STRUCTURE PLAN
(Showing abutment designations)

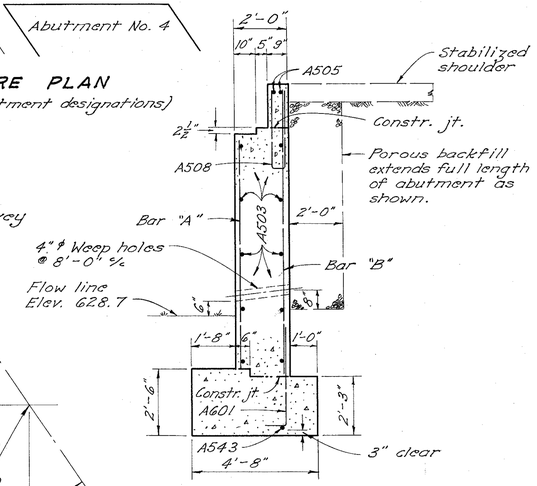

SECTION C-C

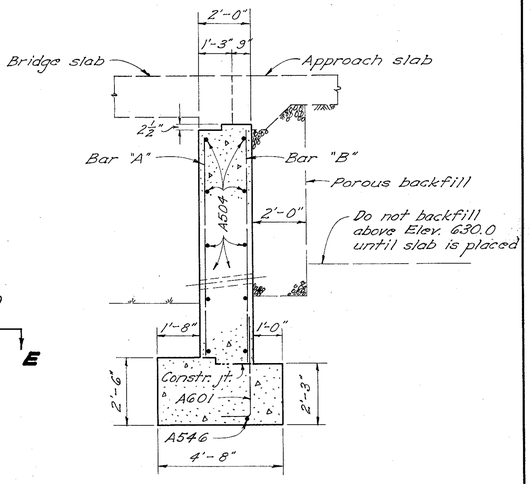

SECTION D-D

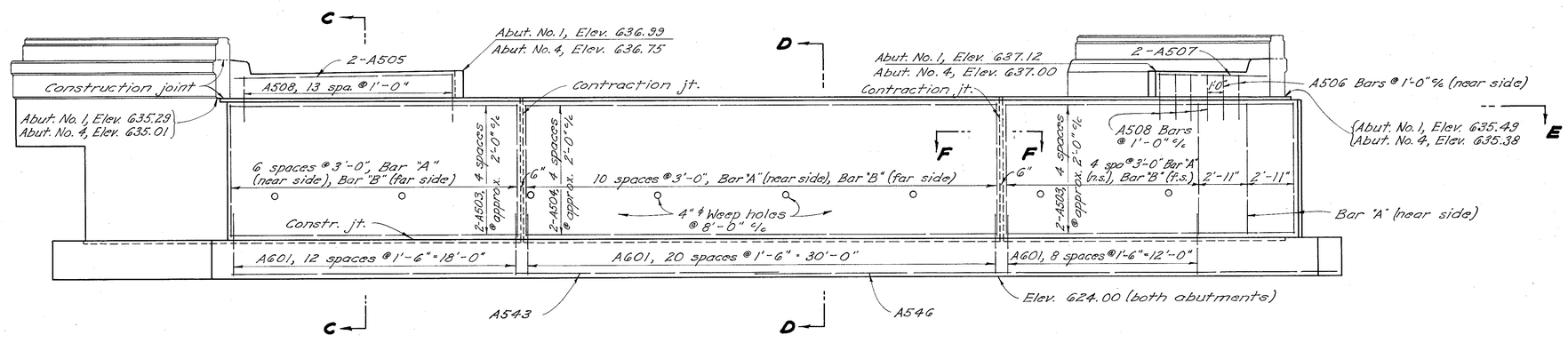

ELEVATION
(Aluminum railing not shown)

TABLE OF REINFORCING BARS		
	Bar "A"	Bar "B"
Abutment No. 1	A501	A502
Abutment No. 4	A509	A510

NOTE: For details not shown on this sheet, see Sheet No. 368

STATE OF OHIO
DEPARTMENT OF HIGHWAYS
DIVISION OF DESIGN AND CONSTRUCTION
BUREAU OF BRIDGES

DETAILS OF ABUTMENTS NO. 1 & 4

BRIDGE NO. LAK-2-0304 L&R
LAKELAND FREEWAY

LAKE COUNTY — STA. 260+10.49 — STA. 260+39.51

DESIGNED	DRAWN	TRACED	CHECKED	REVIEWED	DATE	REVISED
OPM	OPM	prose	MPB	BFG	2-27-59	