MICROFILMED
SEP 17 1985

FED. RD. DIVISION	STATE	PROJECT	
2	OHIO		

LAK-2-0.00

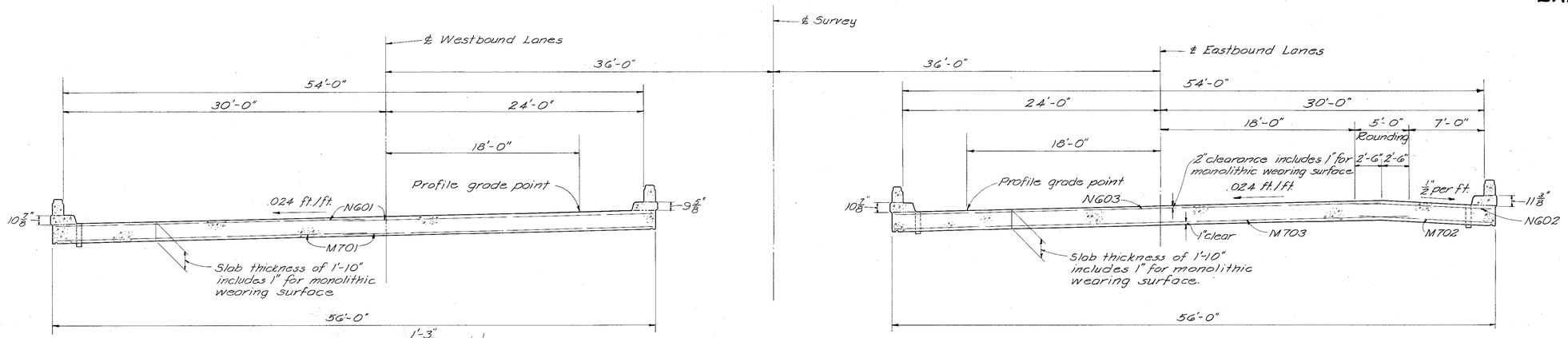

RADIAL TRANSVERSE SECTION

Refer to CS-2-54 for slab and curb reinforcement not shown (do not fan S and T bars). Slabs are not symmetrical about ℄ of roadways.

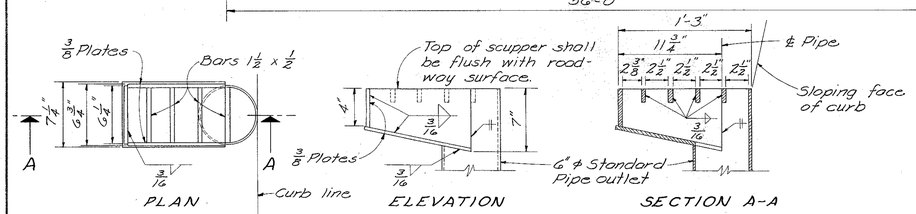

SCUPPER DETAILS, TYPE "B"

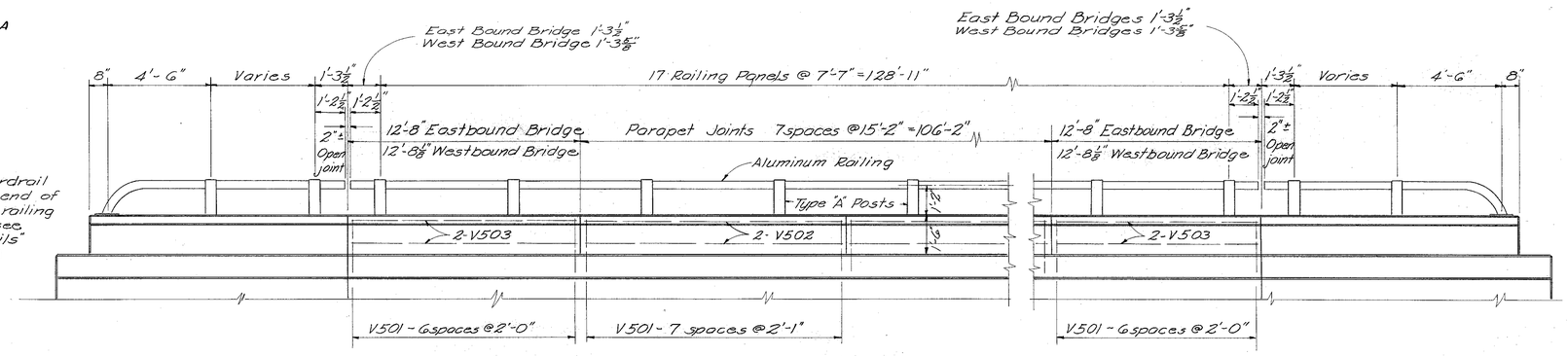

NOTE: For guardrail connection to end of parapet and railing end detail, see "Common Details" Sheet No. 393A

ELEVATION OF RAILING AND PARAPET

For additional details see "Common Details" Sheet No. 393A and "Wing Wall Details" Sheet No. 342

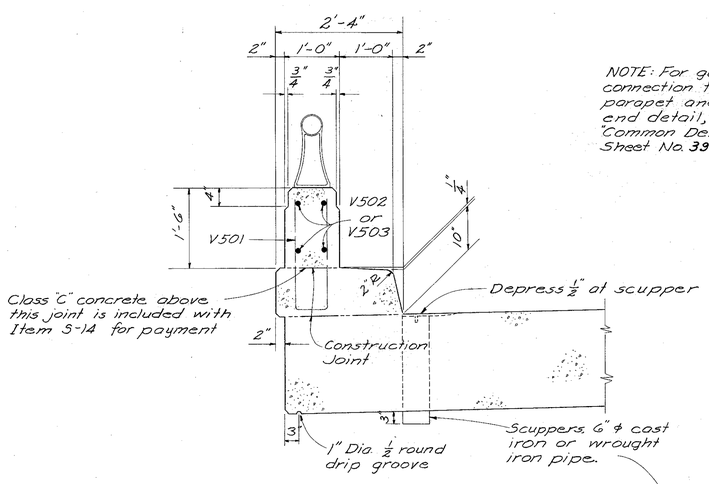

CURB AND PARAPET DETAILS

SCUPPER DETAIL TYPE "A"

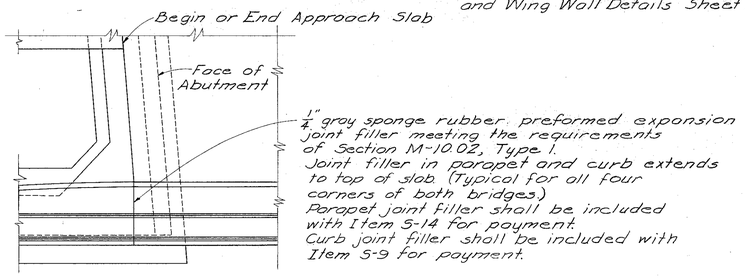

PART PLAN AT ABUTMENT

STATE OF OHIO
DEPARTMENT OF HIGHWAYS
DIVISION OF DESIGN AND CONSTRUCTION
BUREAU OF BRIDGES

SUPERSTRUCTURE DETAILS

BRIDGE No. LAK-2-0105 L&R

OVER WORDEN ROAD

LAKE COUNTY — Sta. 155+41.40 / 156+72.91

DESIGNED	DRAWN	TRACED	CHECKED	REVIEWED	DATE	REVISED
G.M.P.	G.M.P.	Parker	N.J.B.	BFG G.J.K.	12-26-58	