Survey for Flemming
New Legal Discription
4610 Wood Street
Willoughby, Ohio 44094
Part of Great Lot No. 2, Tract No. 13 and
Part of Lot No. 128 as recorded in Volume A of Maps,
Page 6 of Lake County Record of Plats in the
City of Willoughby
File NO. 20-2867
Field Book 153, Page 26 & 36
Drawing Name Flemming.zak

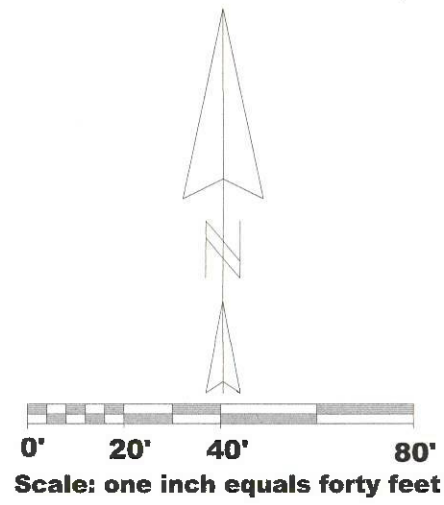

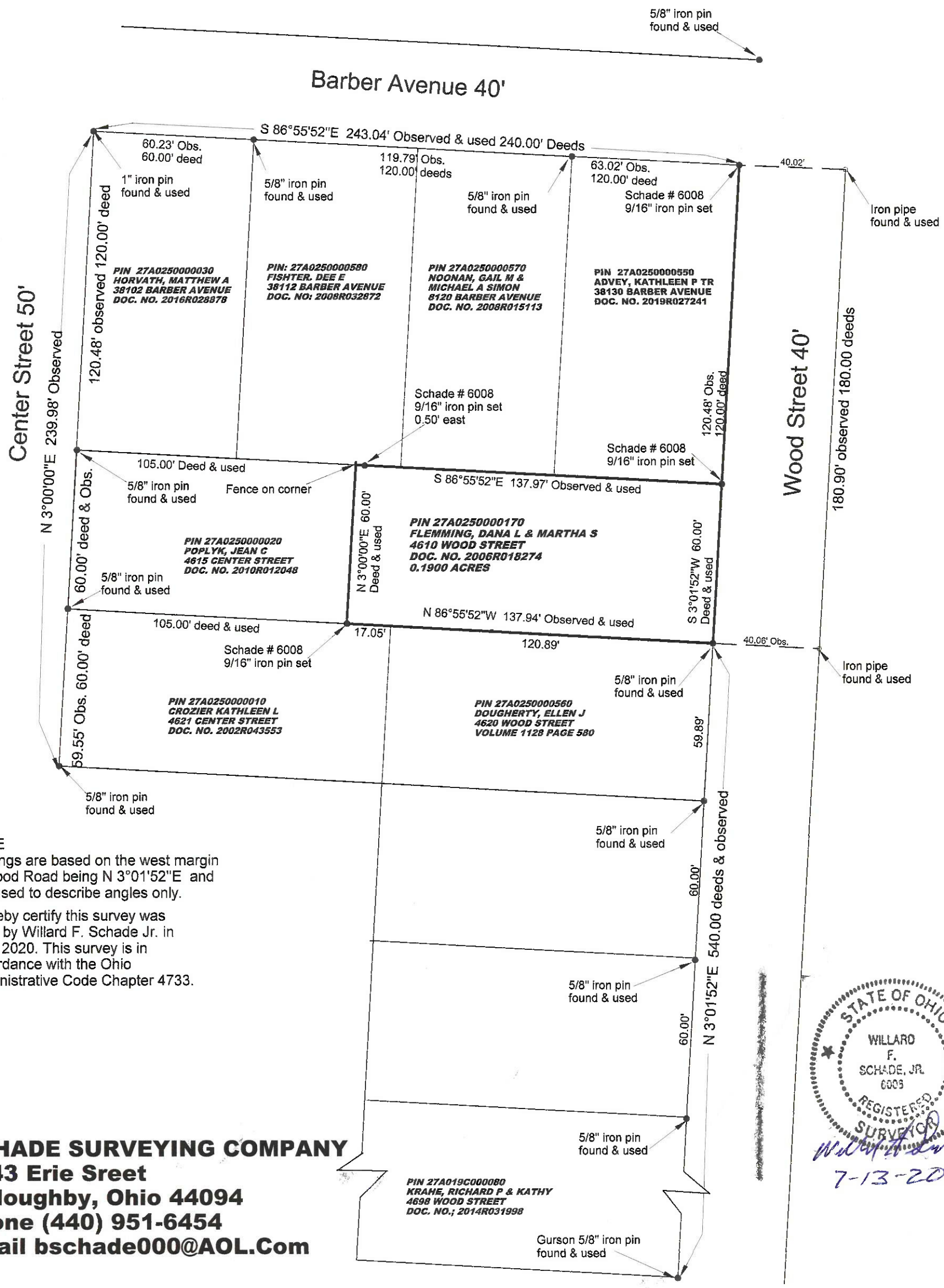

NOTE
Bearings are based on the west margin of Wood Road being N 3°01'52"E and are used to describe angles only.

I hereby certify this survey was done by Willard F. Schade Jr. in June 2020. This survey is in accordance with the Ohio Administrative Code Chapter 4733.

STATE OF OHIO
WILLARD F. SCHADE, JR.
6009
REGISTERED SURVEYOR

7-13-20

SCHADE SURVEYING COMPANY
4043 Erie Sreet
Willoughby, Ohio 44094
Phone (440) 951-6454
Email bschade000@AOL.Com