CALC BY	JEL
DATE	12/80
CHKD BY	[illegible]
DATE	12/80

Item	Description	Unit	A	B	C	D	E	S-1	S-2	E-1	E-2	Span A to B	S-1 to C	E-2 to C	C to B	Span D to B	F&G	H to K	L	M&N	O	Pavement Markings South Leg	Pavement Markings East Leg	Pavement Markings North Leg			TOTALS
621	24" STOP Line	L.F.																				36	85	41			162
621	ONLY Markings	Ea.																				1	2	1			4
621	Lane Arrows	Ea.																				2	4	2			8
621	12" Transverse Stripes (Yellow)	L.F.																				78					78 (Sum 287)
621	12" Transverse Stripes (White)	L.F.																					209				209
621	8" Channelizing Line	L.F.																				220	260	290			770
632	Signal Strain Pole Comb. Design 6, Modified 32'	Ea.		1																							1
632	Removal of Traffic Signal Installation	Ea.					1																				1
632	Signal Strain Pole, Design 6	Ea.	1																								1
632	Concrete For Anchor Base Foundations	C.Y.	2.7	2.7																							5.4
632	Cable Support Assembly	Ea.		1																							1
632	Power Service	Ea.		1																							1
632	Service Cable 2/c No. 8 AWG	L.F.														105											105
632	Power Cable, 2/c No. 8 AWG	L.F.		34																							34
632	Loop Detector Lead-in Cable	L.F.											118	82	54												254
632	Loop Detector Wire As Per Plan	L.F.						168	170	198	142																678
632	Signal Cable, 9/c	L.F.		29								112															141
632	Signal Cable, 7/c	L.F.		29								47															76
632	Messenger Wire, 7 Strand 5/16" W/Accessories	L.F.										130															130
632	Loop Detector Pavement Cutting As Per Plan	L.F.						74	75	89	47																285
632	Loop Detector Amplifier	Ea.		2																							2
632	Delay Type	Ea.		1																							1
632	Covering of Vehicular Signal Head	Ea.										5															5
632	Vehicular Signal Head 5 Section, 1 Way	Ea.										1															1
632	Vehicular Signal Head 3 Section, 2 Way	Ea.										1															1
632	Vehicular Signal Head 3 Section, 1 Way	Ea.										3															3
630	Removal of Sign & Reerection	Ea.																		2							2
630	Removal of Sign & Storage	Ea.																			1						1
630	Ground Mounted Supports No. 3 Post	L.F.															52	104	13								169
630	~~Ground Mounted Supports, No. 2 Post~~	L.F.																									
630	Signs, Flat Sheet	S.F.															20	30	6.3								56.3
843	Controller, 3 Phase Semi-actuated	Ea.		1																							1
843	Coordinator, Secondary	Ea.		1																							1
625	Conduit, 1"	L.F.											49	31	3												83
625	Trench	L.F.											49	31	3												83
625	Ground Rod	Ea.	1	1																							2
625	Pull Box	Ea.			1			1			1																3
625	Light Bracket Arm, 15'	Ea.		1																							1

Location key: REF. A – Northwest Strain Pole; B – Southeast Strain Pole; C – Pull Box; D – Existing Power Pole; E – Existing Signal Installation; S-1 – Loop; S-2 – Loop; E-1 – Loop; E-2 – Loop; Span A to B; S-1 to C; E-2 to C; C to B; Span D to B; F&G – Signs R-31FF-48; H to K – Signs R-31F-36; L – Signs R-32R-30; M&N – Existing Sign; O – Existing Sign; Pavement Markings South Leg; Pavement Markings East Leg; Pavement Markings North Leg; TOTALS

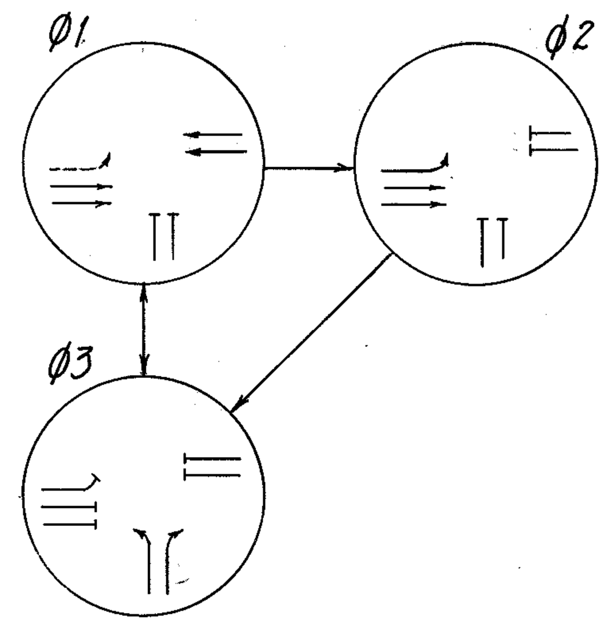

PHASING SEQUENCE

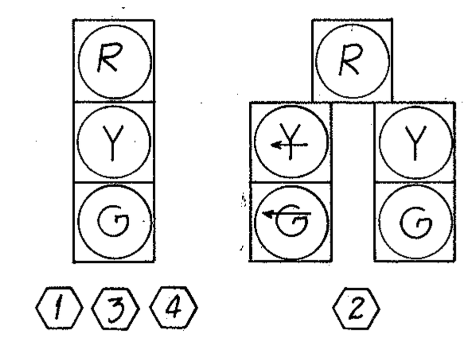

⬡ Signal Head Indication No.

12" SIGNAL INDICATIONS

CONTROLLER DATA

		PHASE 1 R/W	PHASE 1 C	PHASE 2 R/W	PHASE 2 C	PHASE 3 R/W	PHASE 3 C	FLASH
SEQUENCE	Signal 1	G	G**	G	Y	R	R	Y
SEQUENCE	Signal 2	G	G**	←G/G	←Y/Y	R	R	Y
SEQUENCE	Signal 3	G	Y	R	R	R	R	Y
SEQUENCE	Signal 4	R	R	R	R	G	Y	R
TIMING DIAL SETTING	Initial	–		6		6		
TIMING DIAL SETTING	Vehicle	–		2		3		
TIMING DIAL SETTING	Maximum	–		16		23		
TIMING DIAL SETTING	Minimum	34		–		–		
TIMING DIAL SETTING	Clearance (Yellow)	4.0		4.0		4.3		
TIMING DIAL SETTING	Clearance (Red)	2.0		2.0		0.0		
TIMING DIAL SETTING	Recall Switch	ON		Nonlock		Lock		

** If Ø 3 Follows Ø 1, Signal 1 & 2 Shall be Y

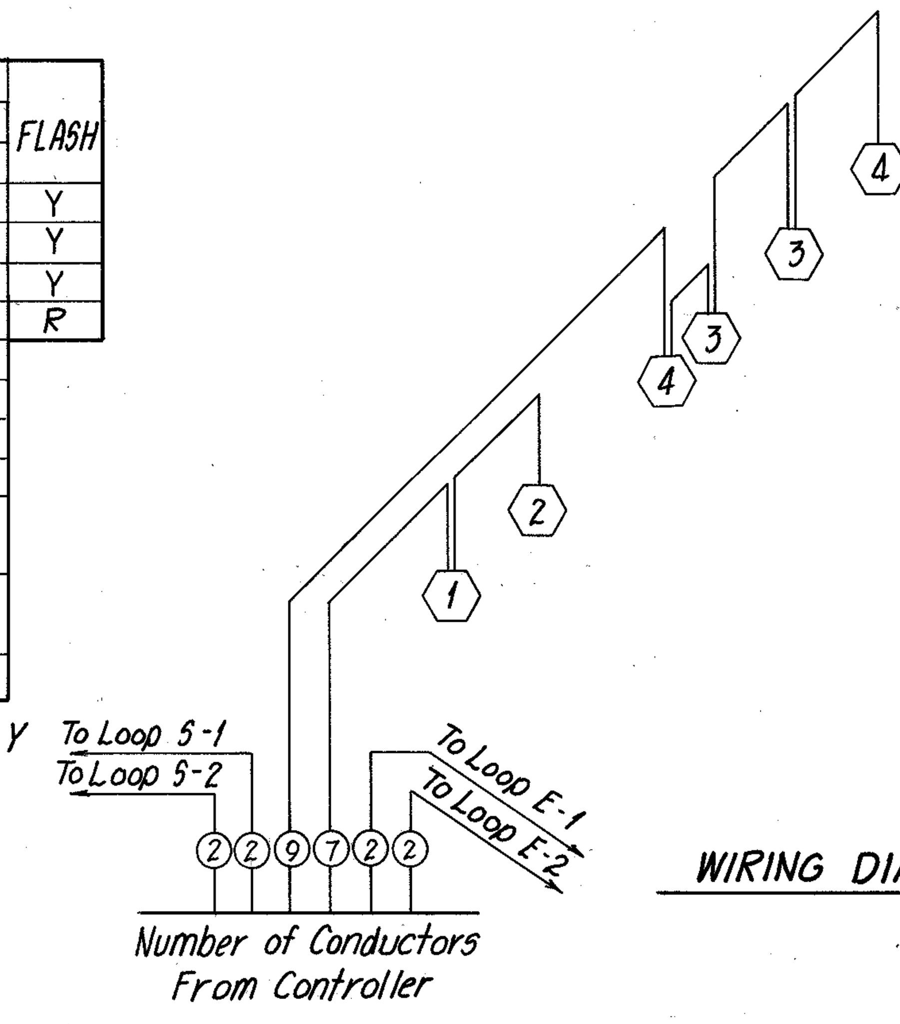

WIRING DIAGRAM

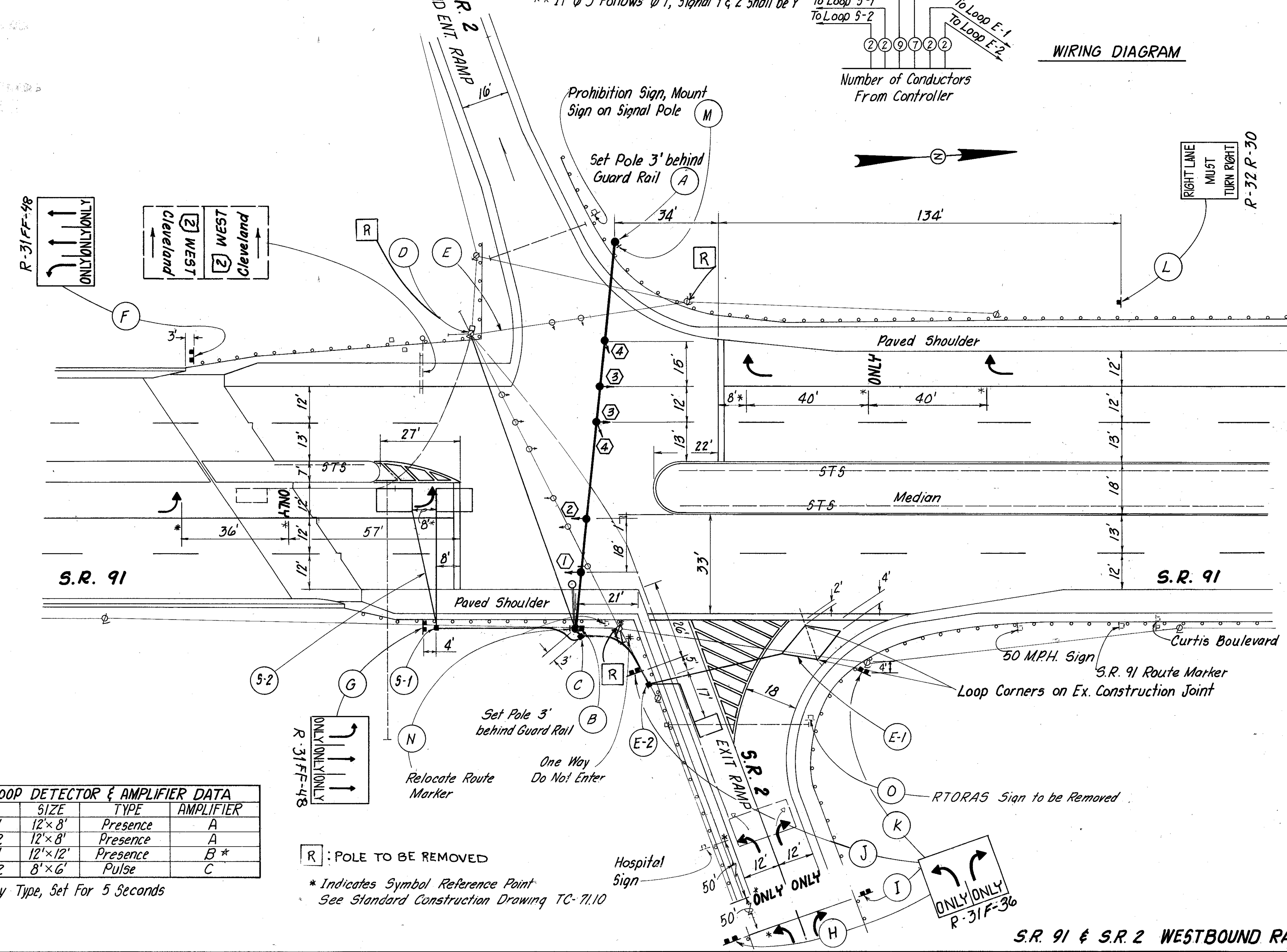

LOOP DETECTOR & AMPLIFIER DATA

LOOP	SIZE	TYPE	AMPLIFIER
S-1	12'×8'	Presence	A
S-2	12'×8'	Presence	A
E-1	12'×12'	Presence	B *
E-2	8'×6'	Pulse	C

* Delay Type, Set For 5 Seconds

R : POLE TO BE REMOVED

* Indicates Symbol Reference Point
See Standard Construction Drawing TC-71.10

S.R. 91 & S.R. 2 WESTBOUND RAMPS