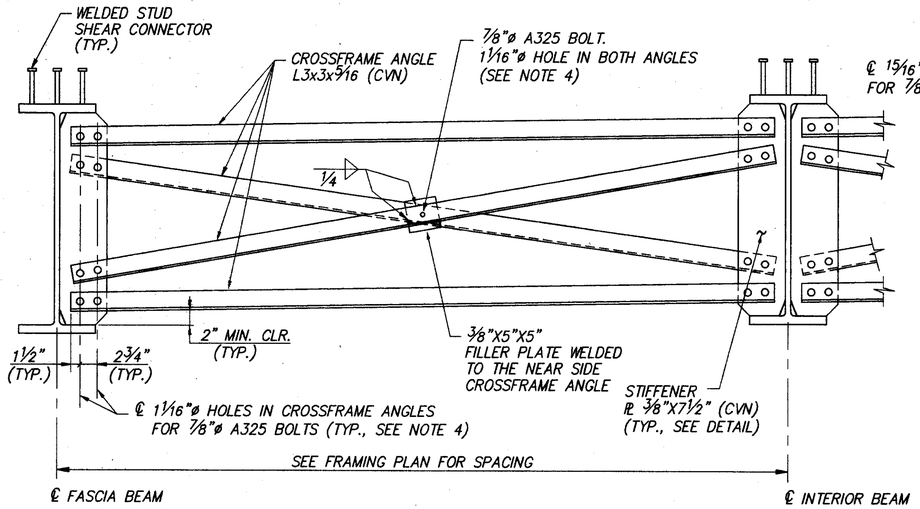

INTERMEDIATE CROSSFRAME TYPE 4A DETAIL

(INTERMEDIATE CROSSFRAMES MARKED THUS ϕ ON FRAMING PLAN AND LOCATED AT BOTH SIDES OF FIELD SPLICES #1 AND #2)

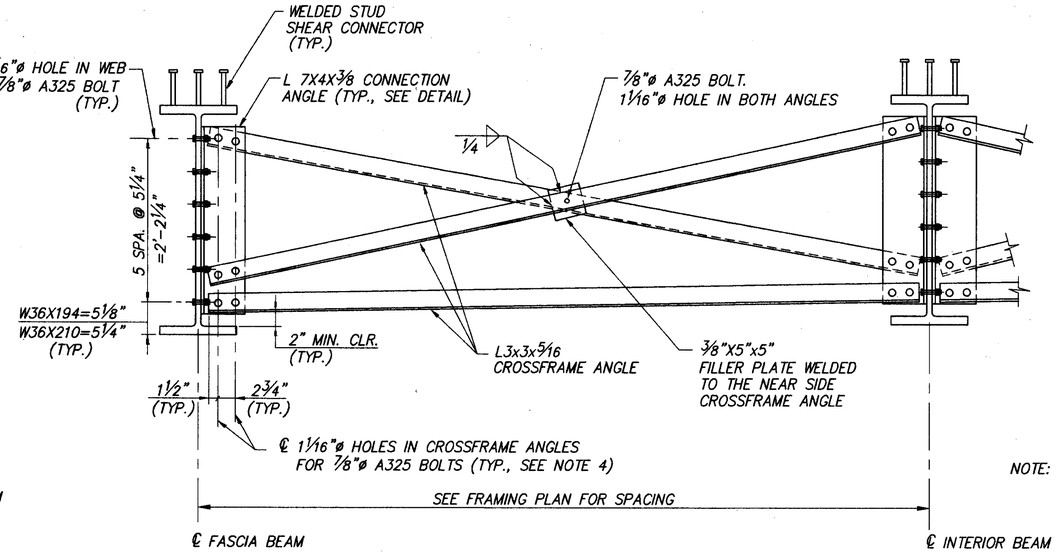

INTERMEDIATE CROSSFRAME TYPE 2 DETAIL

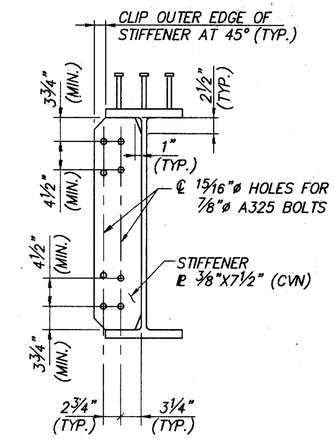

NOTE: FOR STIFFENER WELDS, SEE ODOT STD. DWG. GSD-1-96 SHEET 2 OF 3.

STIFFENER DETAIL

(TYPE 4A CROSSFRAME)

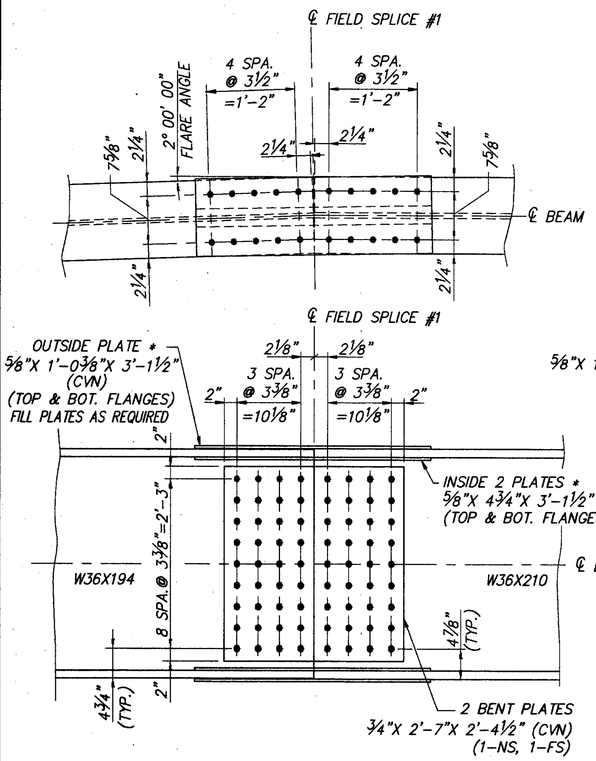

1 3/16"ø HOLES FOR 1 1/8"ø HIGH STRENGTH BOLTS A325, TYPE I, GALVANIZED

FIELD SPLICE #1 DETAIL

(WELDED STUD SHEAR CONNECTORS ARE NOT SHOWN)

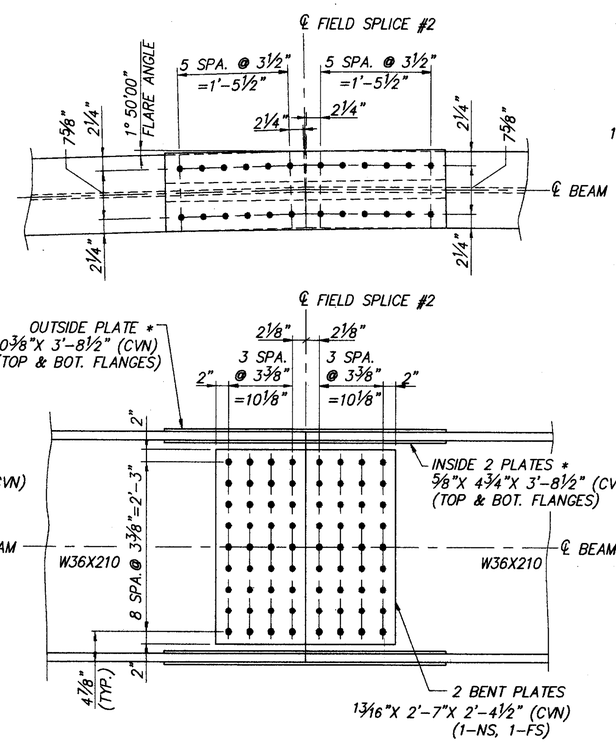

FIELD SPLICE #2 DETAIL

(WELDED STUD SHEAR CONNECTORS ARE NOT SHOWN)

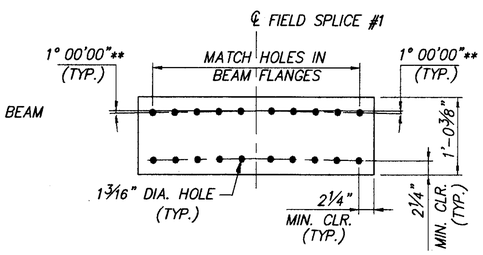

OUTSIDE PLATE 5/8"X 1'-0 3/8" (CVN)

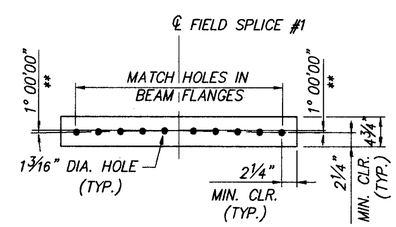

INSIDE PLATE 5/8"X 4 3/4" (CVN)

FLANGE SPLICE PLATE DETAILS

(FIELD SPLICE #1 PLATES ARE AS SHOWN, FIELD SPLICE #2 PLATES SIMILAR)

THE LINES OF HOLES IN THE BEAM FLANGES ARE PARALLEL TO THE CENTERLINE OF THE WEBS.
THE SPLICE PLATES ARE RECTANGULAR.
* – SEE FLANGE SPLICE PLATE DETAILS.
** – HALF OF THE FLARE ANGLE.

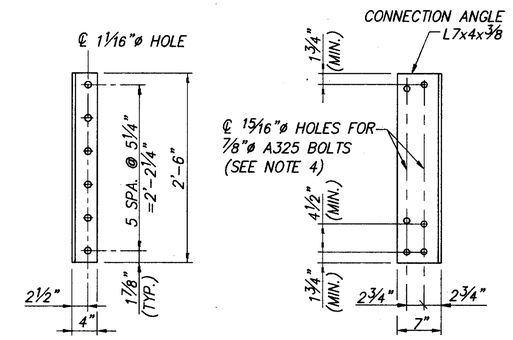

CONNECTION ANGLE DETAIL

(TYPE 2 CROSSFRAME)

NOTES:

1. FOR BRIDGE TRANSVERSE SECTION SEE SHEET 32/41.
2. FOR STEEL FRAMING PLAN, SEE SHEET 28/41.
3. FOR BEAM ELEVATION AND STEEL NOTES, SEE SHEET 29/41.
4. FOR STIFFENER WELDS AND ADDITIONAL INTERMEDIATE CROSSFRAME NOTES, SEE ODOT STD. DWG. GSD-1-96, SHEETS 1 & 2 OF 3.
5. FOR FIELD SPLICES #3, #4 AND #5, SEE ODOT STD. DWG. BS-1-93, SHEETS 1 & 3 OF 3.
6. NOTATION: BRG.-BEARING; TYP.-TYPICAL; CLR.-CLEAR; MIN.-MINIMUM; CVN-CHARPY V NOTCH; E.F.-EACH FACE; SPA.-SPACES; NS-NEAR SIDE; FS-FAR SIDE; BOT.-BOTTOM.

CT Consultants
Engineers • Architects • Planners

DATE	REVIEWED	STRUCTURE FILE NUMBER
10/26/01	J.E.A.	4304055
DRAWN I.A.S.	REVISED	
DESIGNED I.A.S.	CHECKED J.P.R.	

STRUCTURAL STEEL DETAILS
BRIDGE NO. LAK-90-0945
S.R. 615 OVER INTERSTATE 90

LAK-IR90/SR615-9.26/1.51

358 / 343

H:\CT\97125\BRIDGE\9712514.DWG PLOT SCALE 1:12