MICROFILMED
JUN 27 1985

FED. RD. DIVISION	STATE	PROJECT	
2	OHIO		

258
277

LAKE COUNTY
SEC. LAK-1-6.97

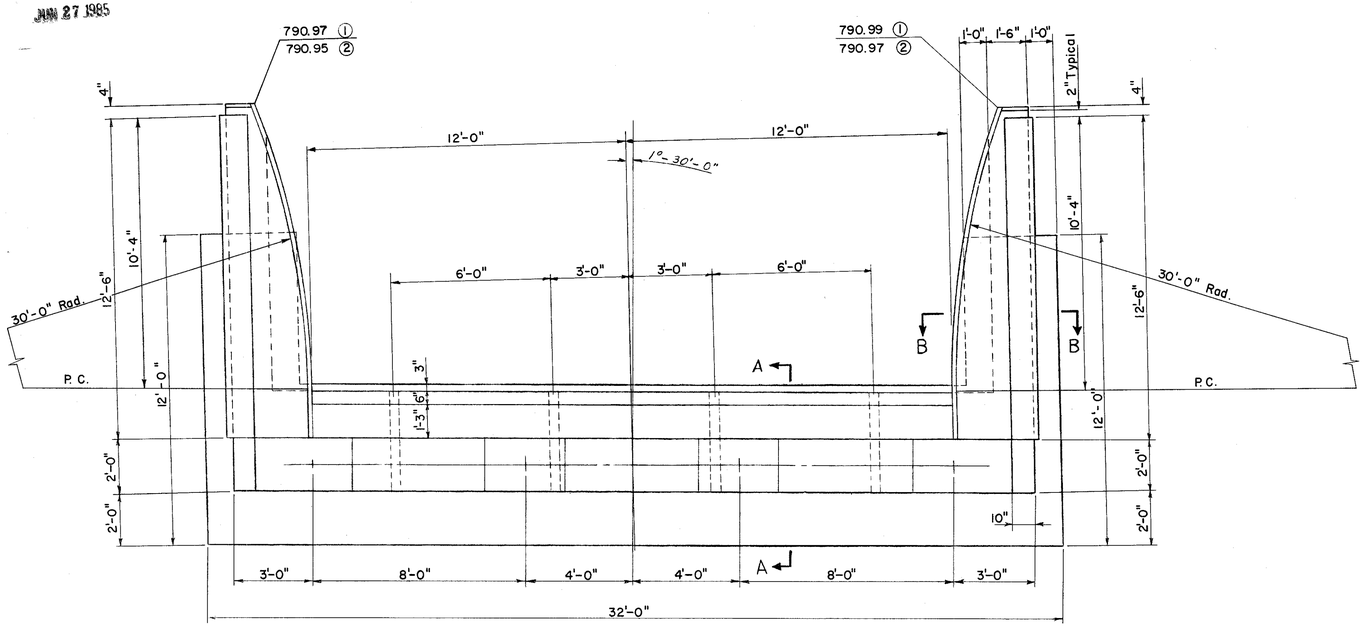

PLAN

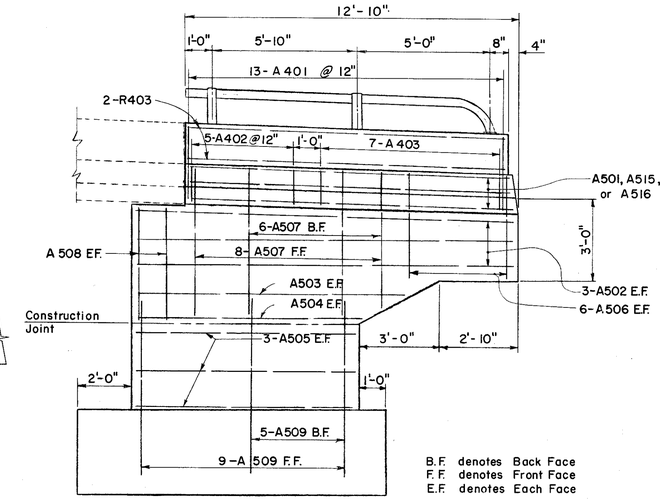

WING WALL ELEVATION

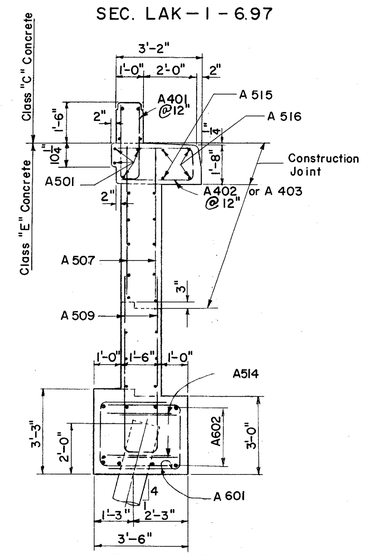

SECTION B-B

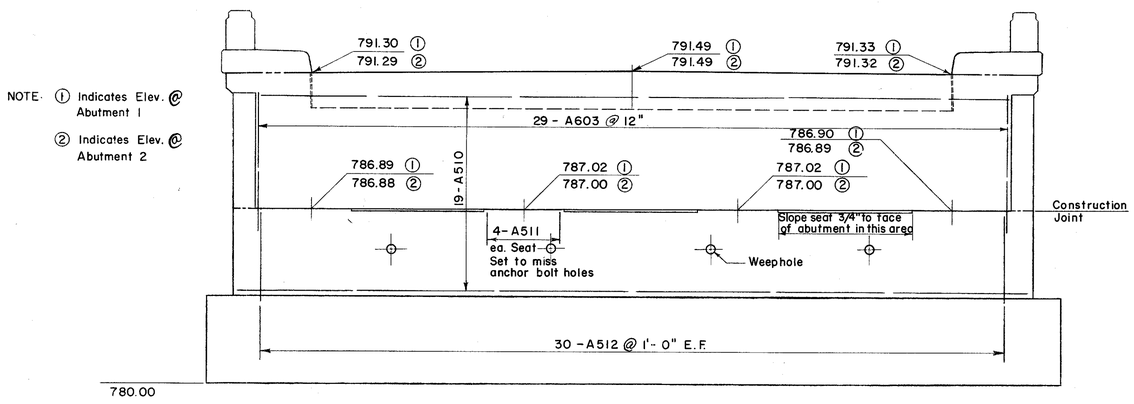

ELEVATION

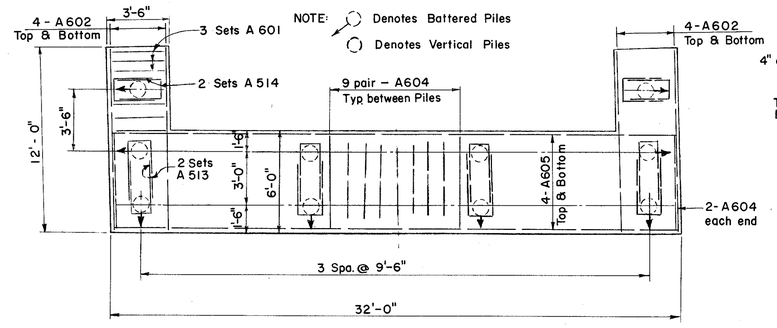

FOOTING PLAN

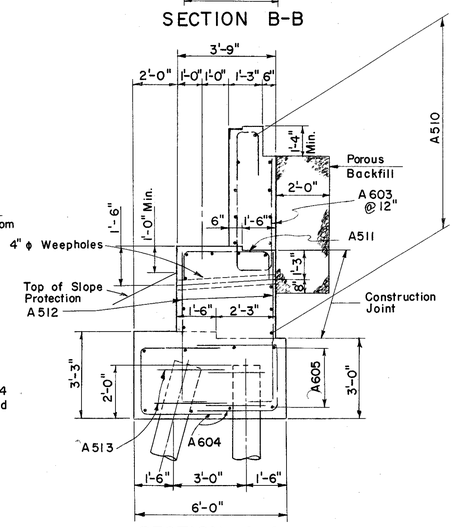

SECTION A-A

NOTES:

- Porous Backfill shall extend upward to the approach slab and to the surface of the earth shoulders, and outward to the surface of the embankment slopes. Excavation therefor, in excess of that required for construction of the abutment, shall be considered as paid for in the bid price per cu. yd paid for porous backfill.
- All Piles shall be 12" ϕ cast-in-place concrete piles. Estimated length of vertical piles 30', battered piles 33'
  Piles shall be driven to a minimum bearing capacity of 25 tons per pile for abutments.

SEC. C-31

PREPARED BY
CAPITOL ENGINEERING ASSOCIATES, DILLSBURG, PA.
FOR

STATE OF OHIO
DEPARTMENT OF HIGHWAYS
DIVISION OF DESIGN AND CONSTRUCTION
BUREAU OF BRIDGES

ABUTMENTS
BRIDGE NO. LAK-1-0950
S.R.1 UNDER HART ROAD
LAKE COUNTY
STA. 147 + 34.15

DESIGNED	DRAWN	TRACED	CHECKED	REVIEWED DATE	REVISED
GP					