MICROFILMED
APR 7 1999

FED. RD. DIVISION	STATE	PROJECT	
2	OHIO	ACI-1103 (27)	

397
413

LAKE COUNTY
SEC. LAK-1-16.55

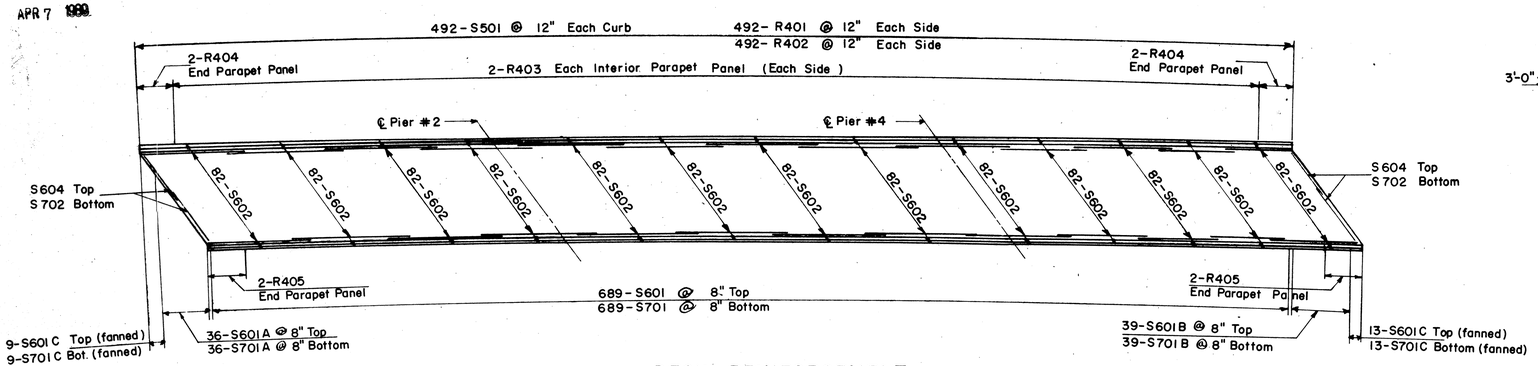

DECK REINFORCEMENT

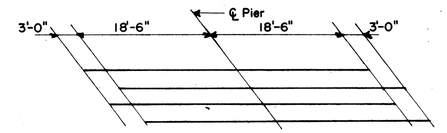

DIAGRAM SHOWING STAGGER OF S603 BARS OVER PIER

32 - S603 Over Each Pier

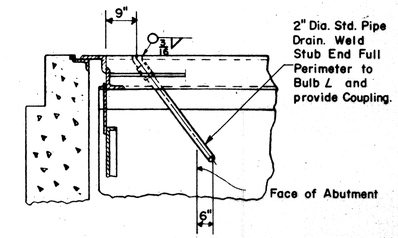

SCUPPER DETAIL AT END DAM
WEST ABUTMENT ONLY

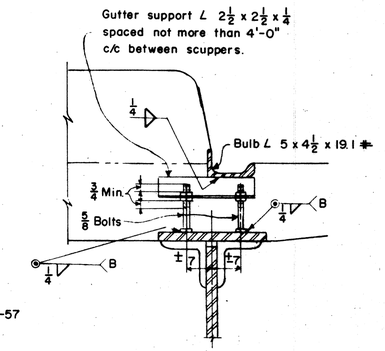

GUTTER SUPPORT

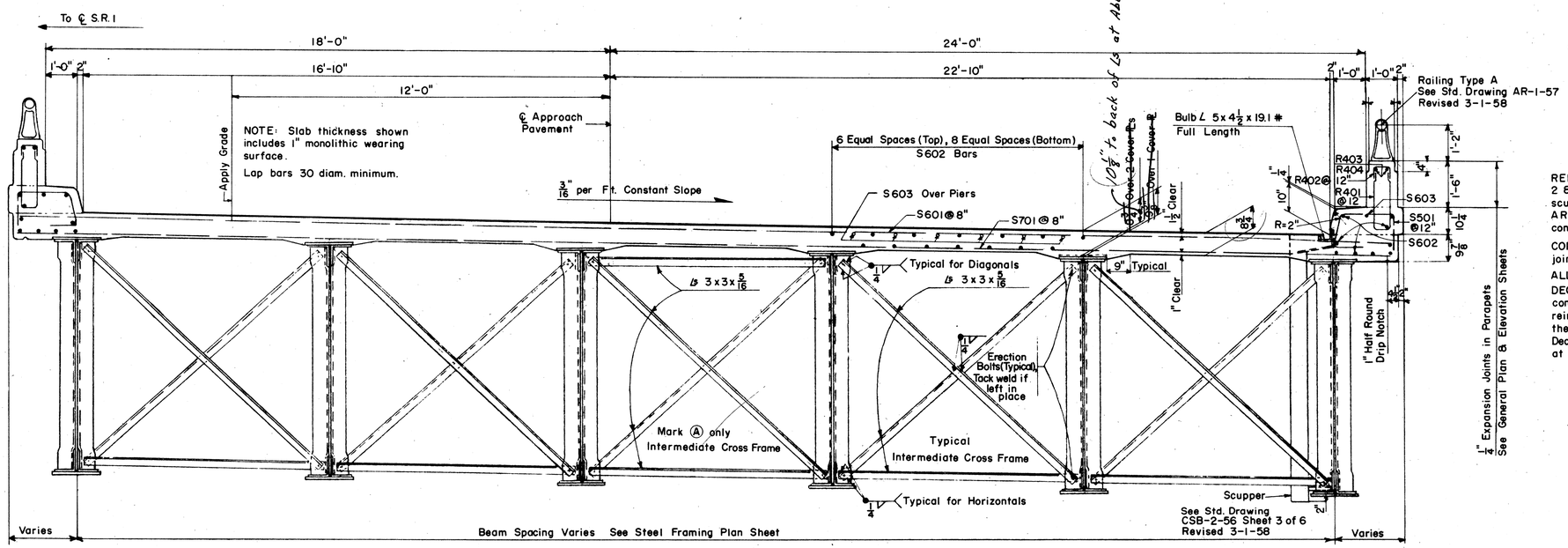

TYPICAL CROSS SECTION

NOTES

REFERENCE shall be made to Std. Drawing CSB-2-56 sheets 2 & 3 of 6 revised 3-1-58 for details of end dams, gutters, scuppers, pipe drains and curb plates, also to Std. Drawing AR-1-57, revised 3-1-58 for aluminum railing Type "A" and concrete parapet details

CONCRETE and reinforcing steel above parapet construction joint included with railing for payment.

ALL Concrete shall be Class "C".

DECK PLACING PROCEDURE: In placing the Deck Concrete, construction joints will be permitted parallel to the transverse reinforcing steel and near the middle of any span. Because of the flow of curing water from the surface of previously placed Deck Concrete, the sequence of pours shall be upgrade, starting at the lowest end.

SEC C-33 FED. AID PROJ. NO. ACI-1103 (27)

PREPARED BY
CAPITOL ENGINEERING ASSOCIATES, DILLSBURG, PA.
FOR
STATE OF OHIO
DEPARTMENT OF HIGHWAYS

DECK DETAILS
BRIDGE NO. LAK-1-1905
S.R.1 OVER PAINE CREEK (SOUTH BRIDGE)
LAKE COUNTY
STA. 654+75

DESIGNED	DRAWN	TRACED	CHECKED	REVISED	DATE	REVISED
JHT	JHT		W.O.			6-3-58 7-17-58

13