SIGN ELEVATION VIEW

LAKE COUNTY
LAK-90-13.00

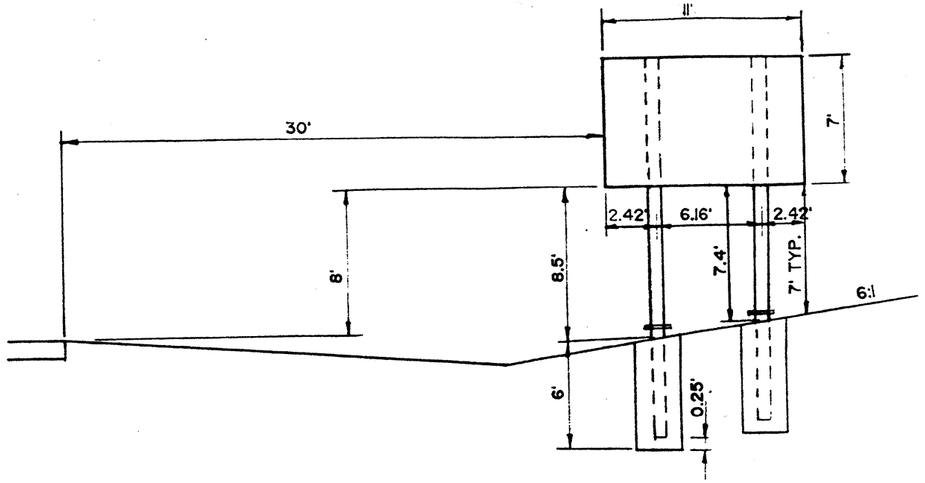

SIGN NO. 1
STA. 300+15

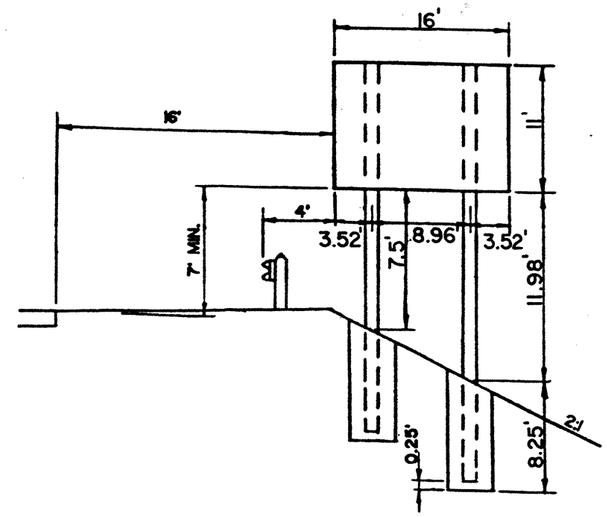

SIGN NO. 23
STA. 330+68

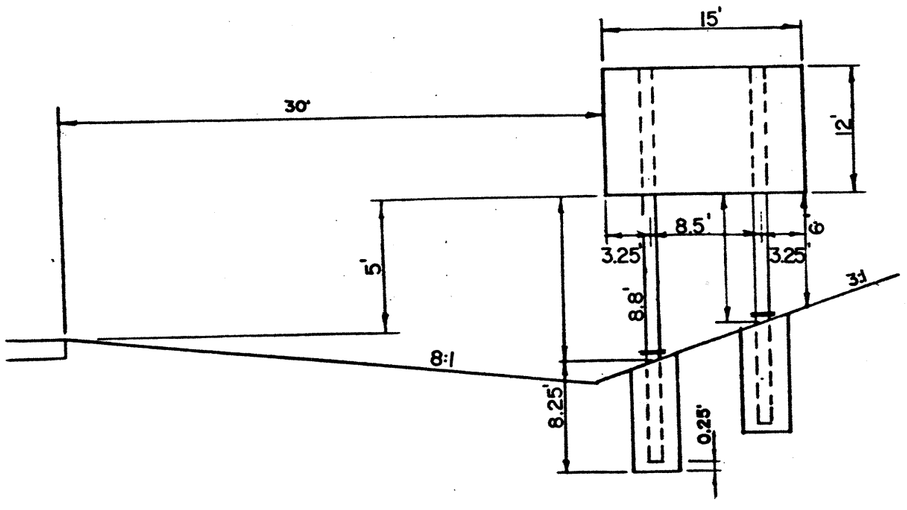

SIGN NO. 48A
STA. 407+61

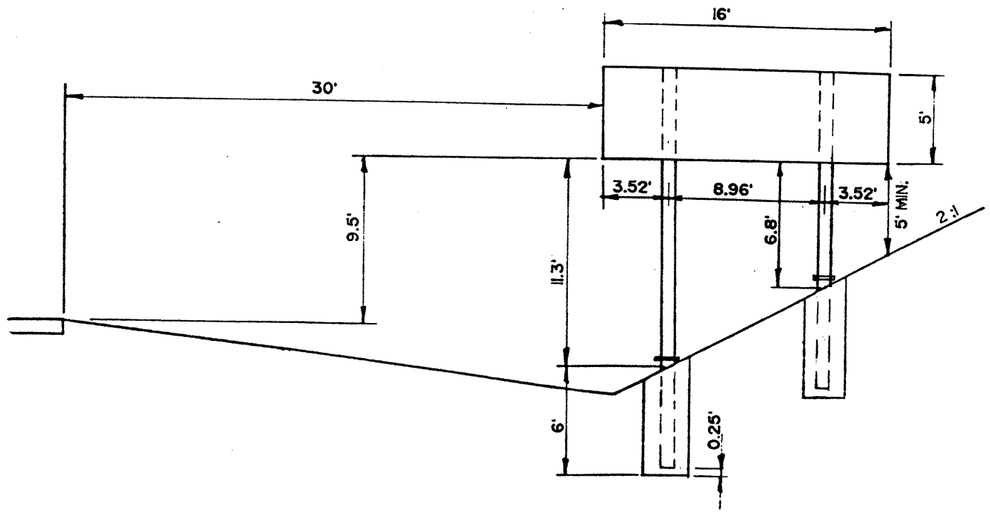

SIGN NO. 50
STA. 422+18