PAVEMENT REPAIR QUANTITIES													
							446	407	448	254	407	301	203
ROUTE	LOG PONT TO LOG POINT	LENGTH		WP	WA	PAVEMENT AREA	ASPHALT CONCRETE SURFACE COURSE TYPE 1, PG 70-22, AS PER PLAN (1½")	TACK COAT FOR INTERMEDIATE COURSE @ 0.05 GAL/SQYD	ASPHALT CONCRETE INTERMEDIATE COURSE, TYPE 1, PG 64-22 (0"-½")	PAVEMENT PLANING BITUMINOUS, AS PEP PLAN	TACK COAT @ 0.10 GAL/SQYD	BITUMINOUS AGGREGATE BASE, PG 64-22	EXCAVATION WITHOUT EMBANKMENT CONSTRUCTION
		MILE	FT.	FT.	FT.	SQ.YD.	CU.YD.	GALLON	CU.YD.	SQ.YD.	GALLON	CU.YD.	CU.YD.
SR 86	2.68-5.46	2.78	14678	20		32618	1359	1630	453	32618	3262		
	2.68-5.46 RT	2.78	14678		3	4893	204	245	68		489	816	1087
	2.68-5.46 LT	2.78	14678		3	4893	204	245	68		489	816	1087
EXTRA AREAS:						330	18	17	5	330	33		
INTERSECTIONS													
	TOTALS					42734	1785	2137	594	32948	4273	1632	2174

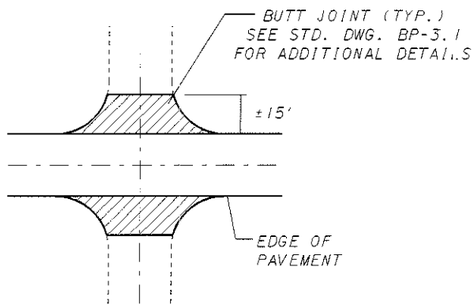

TYPICAL INTERSECTION DETAIL

CALCULATED KAS
CHECKED LDH

PAVEMENT SUB-SUMMARY

LAKE COUNTY
LAK-86-2.68

I:\PROJECTS\Pid22196\22196GMA.DGN 29-JAN-2002 11:08AM jgr movse