DRAINAGE DETAILS

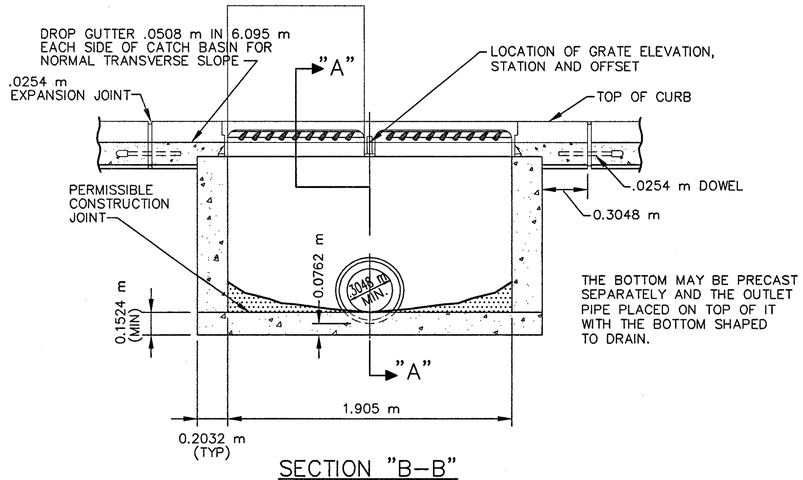

SECTION "B–B"

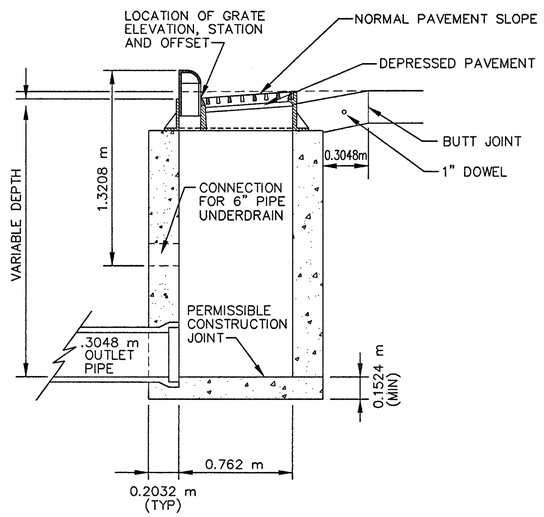

SECTION "A–A"

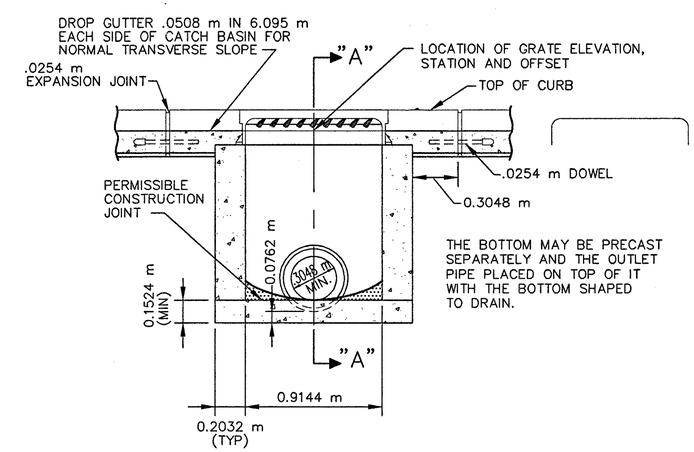

SECTION "C–C"

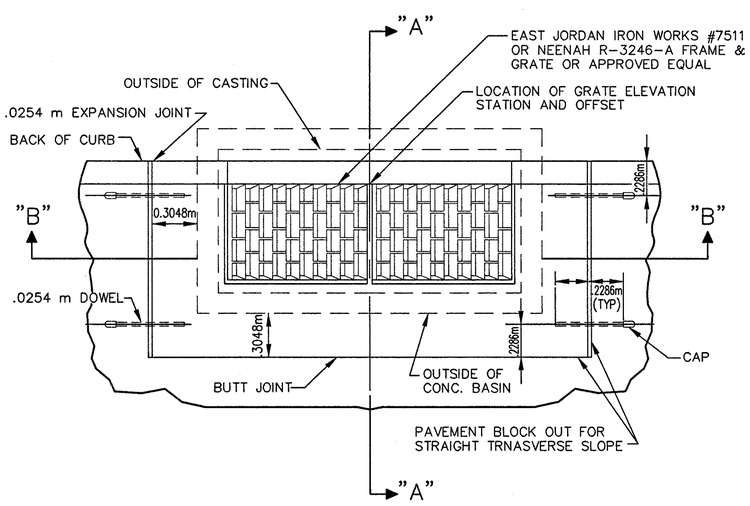

PLAN

ITEM 604 – CATCH BASIN, NO. 3, AS PER PLAN

N.T.S.

NOTES:

- THESE DETAILS SHALL APPLY TO NEW CATCH BASINS CONSTRUCTED WITH THIS PROJECT, TO ITEM 604 – CATCH BASIN, ADJUSTED TO GRADE, AS PER PLAN, TYPES II, III, IV, & V AND ITEM 604 – CATCH BASIN, RECONSTRUCTED TO GRADE, AS PER PLAN, TYPES II, III, IV, V, CI, & VII
- SEE GENERAL NOTES REGARDING DEFINITION OF VARIOUS CATCH BASIN TYPES.
- SEE GENERAL NOTES REGARDING THE AVAILABILITY, AND USE OF EXISTING STORED CASTINGS AND MISCELLANEOUS DRAINAGE MATERIALS.

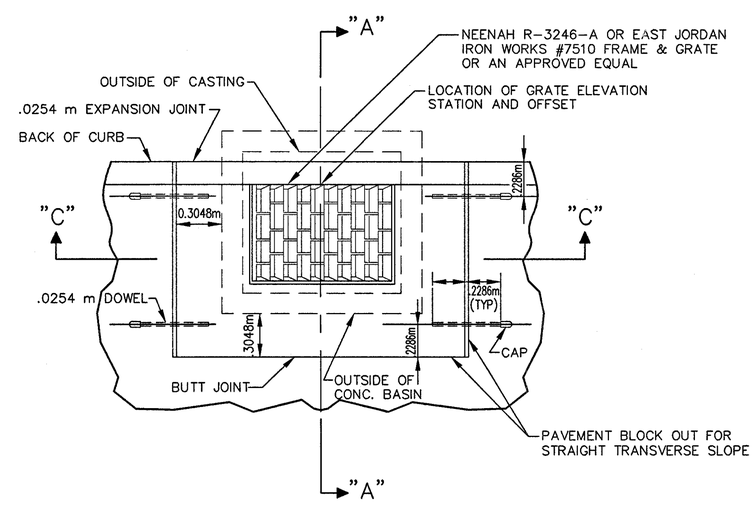

PLAN

ITEM 604 – CATCH BASIN, NO. 3A, AS PER PLAN

N.T.S.

N

HORIZONTAL SCALE IN METERS

CALC. BY:

CHECKED BY:

DRAINAGE DETAILS

LAK–640–3.444

184/214

94014–PG–184–DD1\11–24–00

94–014