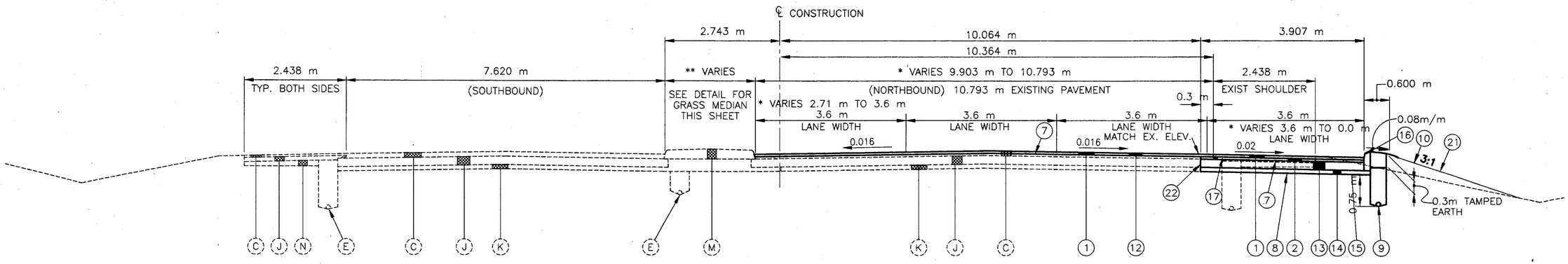

** 3.048 m at STA. 0+858.341 to 2.134 m at STA. 0+879.068
2.134 m from STA. 0+879.068 to STA. 0+974.768

NORMAL SECTION – S.R. 91

* STA. 0+810.000 to STA. 0+879.954	=	69.954 m
STA. 0+879.954 to STA. 0+974.789	=	94.835 m
		164.789 m

NOTE: 1) EXISTING UNDERDRAINS TO BE REMOVED UNDER ITEM 203 – EXCAVATION, NOT INCLUDING EMBANKMENT CONSTRUCTION.

2) PROPOSED CURB REVEAL SHALL BE 150mm.

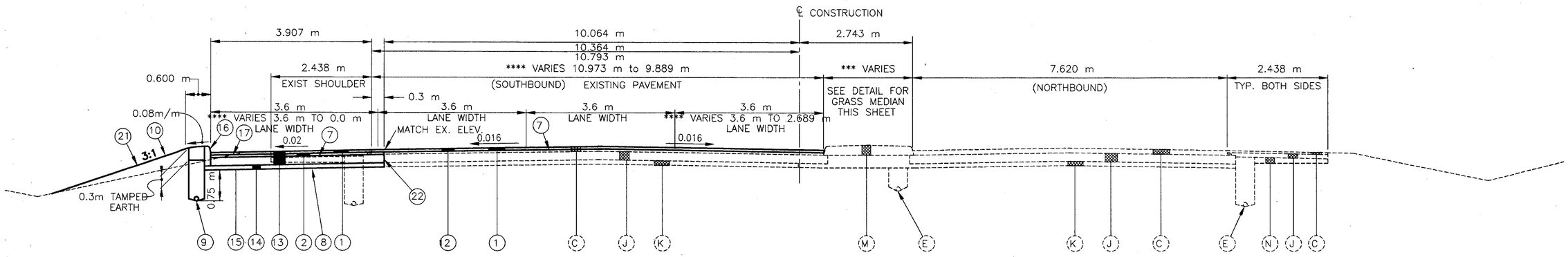

*** 2.134 m from STA. 1+120.774 to STA. 1+025.424
2.134 m at STA. 1+120.774 to 3.048 m at STA. 1+141.500

NORMAL SECTION – S.R. 91

STA. 1+025.305 to STA. 1+120.774	=	95.499 m
STA. 1+120.774 to STA. 1+150.000	=	29.226 m
		124.695 m

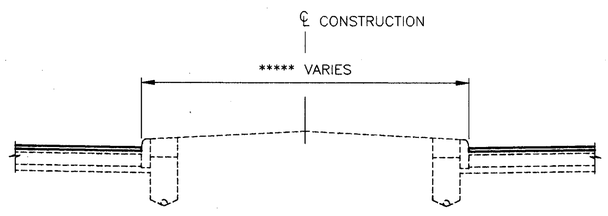

***** 3.203 m at STA. 0+854.768 to 3.048 m at STA. 0+858.341

3.048 m at STA. 1+141.50 to 3.218 m at STA. 1+145.424

GRASS MEDIAN DETAIL

FOR EXISTING LEGEND SEE SHEET 3
FOR LEGEND SEE SHEET 4

CALCULATED
CHECKED

TYPICAL SECTIONS - S.R. 91

LAK - 640 - 2.865 (1.78)

H:\1998\98208\DWG\14199GYC.DWG