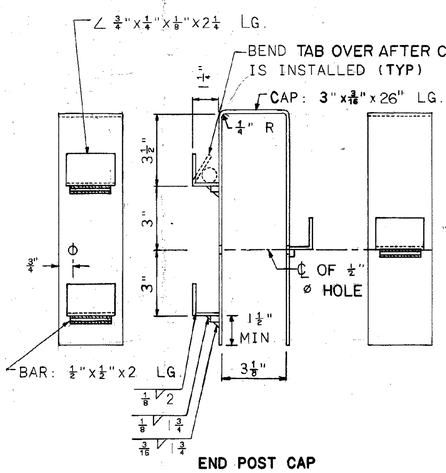

END POST CAP

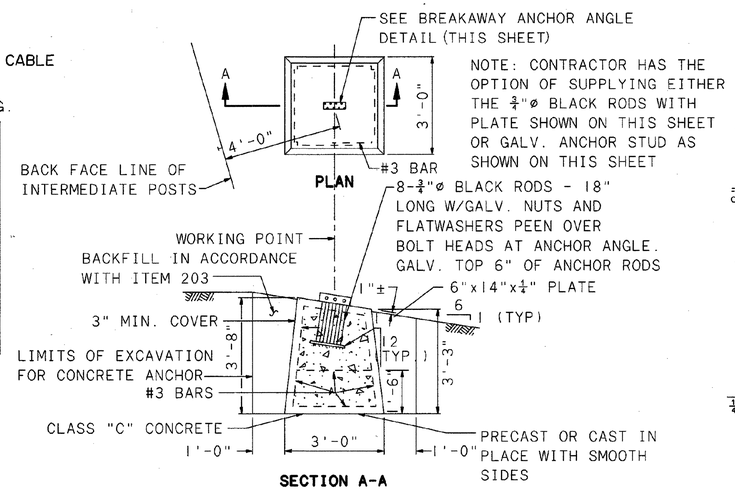

SECTION A-A
CONCRETE ANCHOR
DETAIL "F"

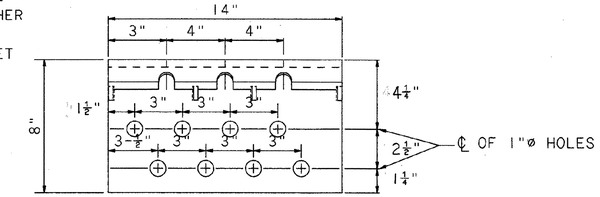

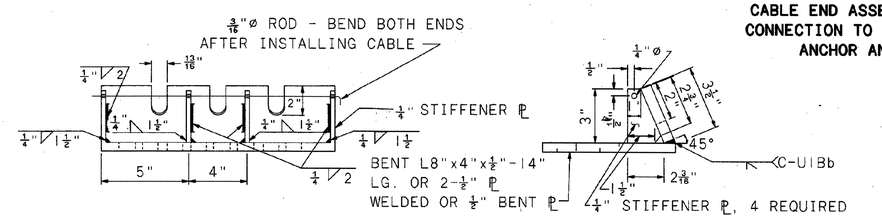

BREAKAWAY ANCHOR ANGLE

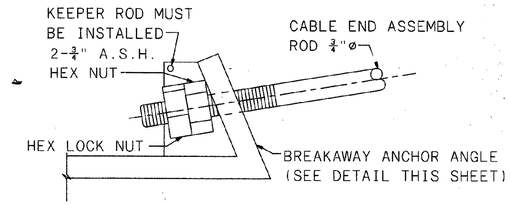

DETAIL "K"
CABLE END ASSEMBLY ROD
CONNECTION TO BREAKAWAY
ANCHOR ANGLE

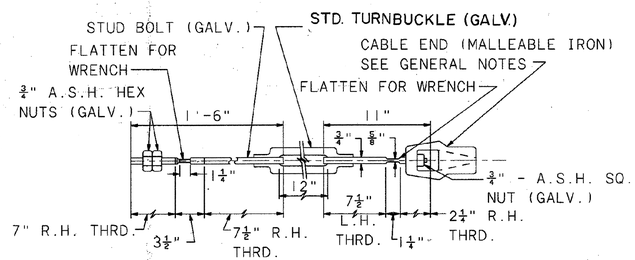

DETAIL "A"
STEEL TURNBUCKLE CABLE END ASSEMBLY

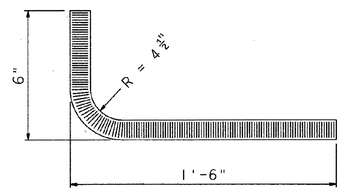

GALVANIZED ANCHOR STUD
3/4"ø x 1'-6" VERTLEG

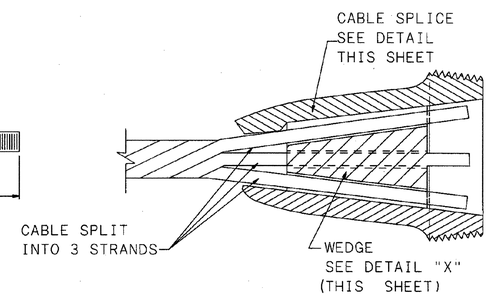

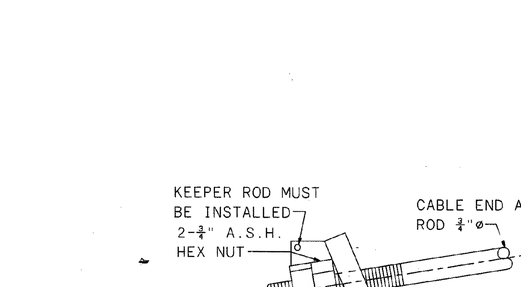

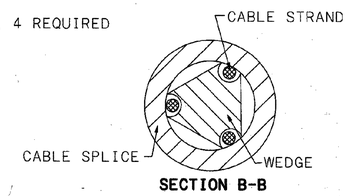

SECTION B-B

CABLE SPLICE ASSEMBLY DETAIL

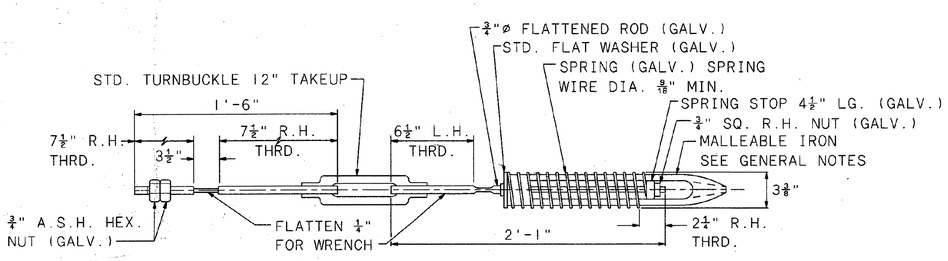

DETAIL "B"
SPRING CABLE END ASSEMBLY WITH TURNBUCKLE
(COMPENSATING DEVICE)

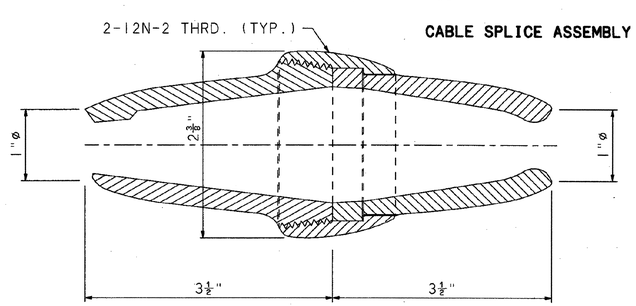

CABLE SPLICE

NOTE: USE WITH WEDGE AS SHOWN IN DETAIL "X" (THIS SHEET) MATERIAL MALLEABLE IRON A.S.T.M. A-47 GR. 32510

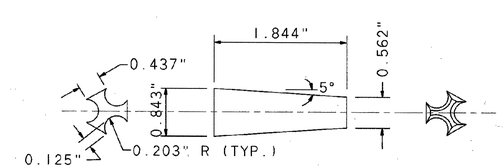

DETAIL "X"
TYPICAL WEDGE FOR ALL
SPLICES & CABLE FITTINGS

CABLE MEDIAN BARRIER DETAIL

LAKE COUNTY
LAK-2/44-13.05/4.14

61
93

CALCULATED
CHECKED

PLOTTED FROM PROJECTS\Bpid18391Bdgn\B18391grh.dgn