NOTE: ALL CONDUIT SHALL BE 713.04 UNLESS OTHERWISE NOTED.

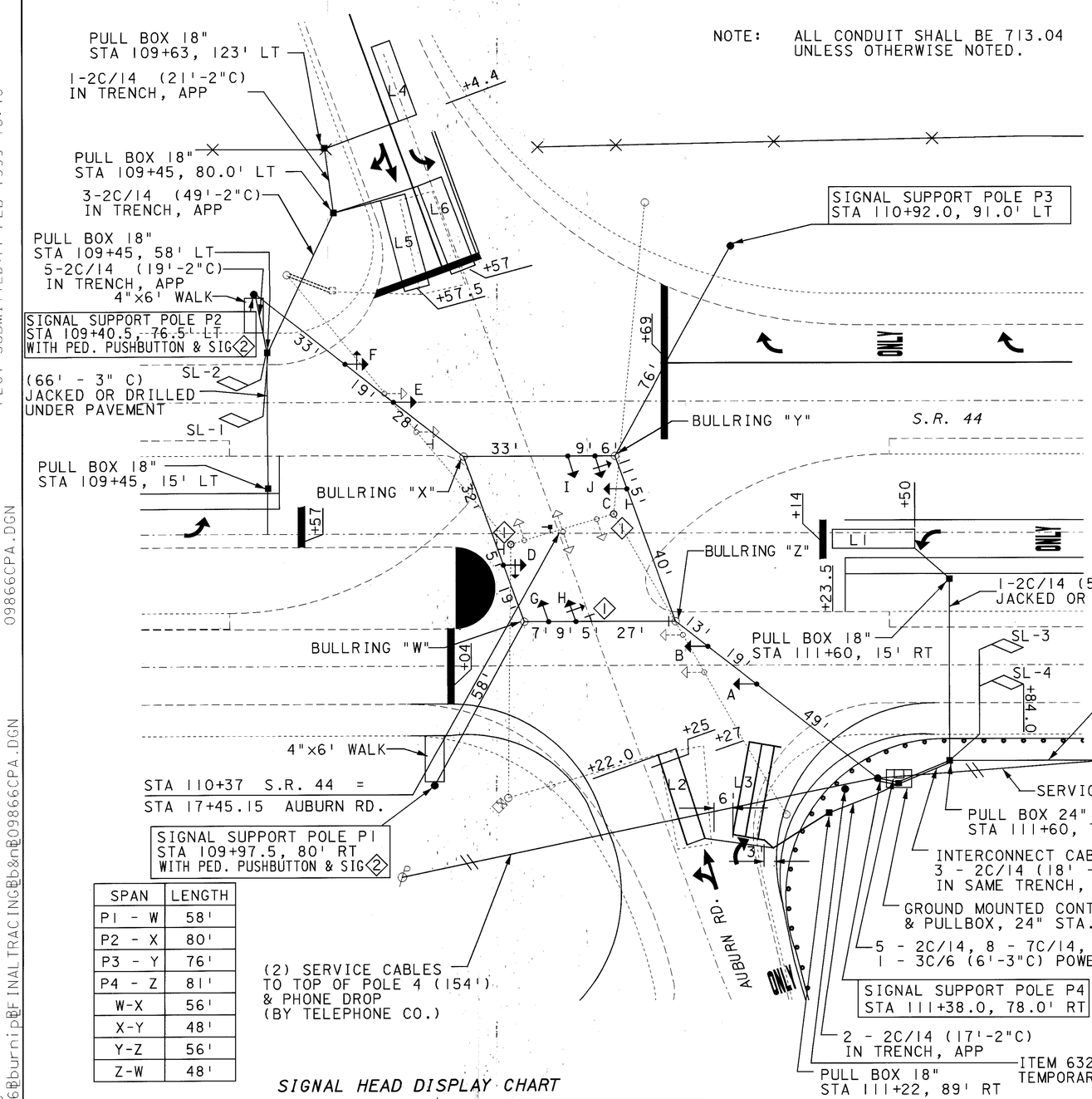

SPAN	LENGTH
P1 - W	58'
P2 - X	80'
P3 - Y	76'
P4 - Z	81'
W-X	56'
X-Y	48'
Y-Z	56'
Z-W	48'

SIGNING

R-25F-24 — LEFT TURN YIELD ON GREEN (1)

R-73B-9 9"x12" — PUSH BUTTON FOR GREEN LIGHT (2)

SIGNAL HEADS 12" LENS

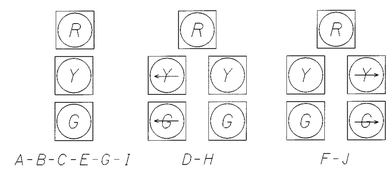

HEADS C,D,G,H,I & J SHALL HAVE TUNNEL VISORS

ITEM 632 - REMOVAL OF TRAFFIC SIGNAL INSTALLATION	STORAGE	DISPOSAL
CABLE + WIRES		X
(4) - STEEL STRAIN POLES	3	1
(8) - 3 SECTION SIGNAL HEADS		X
CONTROLLER & CABINET	X	
DISCONNECT SWITCH AND METER BASE	X	
(2) - SIGNS AND HANGER ASSEMBLIES	X	
(2) - PULL BOXES (CONCRETE)	X	

PHASE DIAGRAM

CONTROLLER SHALL PROVIDE PHASE SKIPABILITY
CALLS TO Ø5 SHALL ALSO CALL Ø4 + Ø8
OMIT Ø3 DURING Ø4 + Ø8

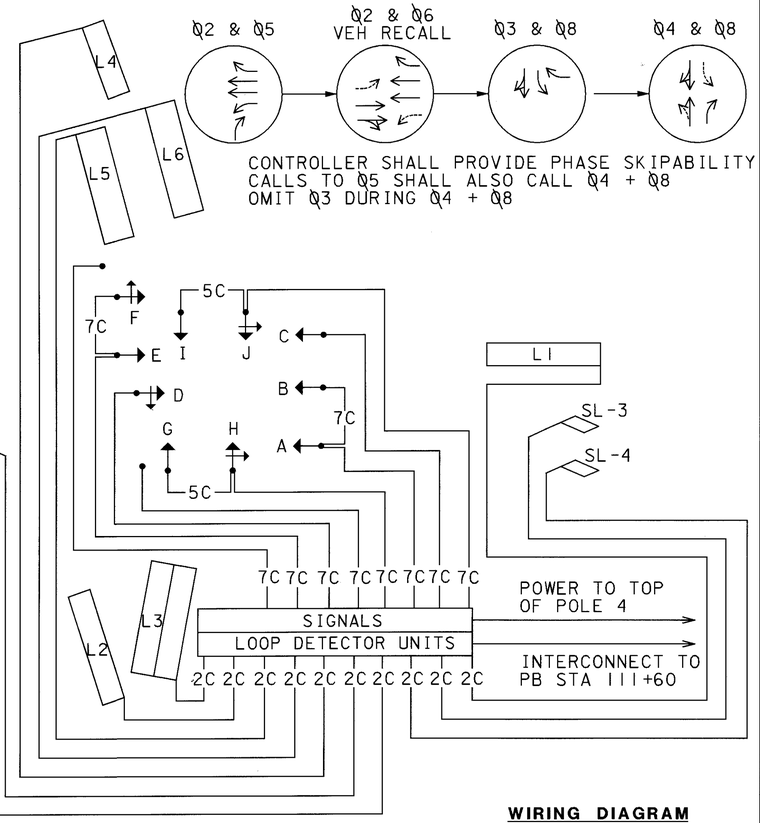

WIRING DIAGRAM

SIGNAL HEAD DISPLAY CHART

HEAD	PHASE 2&5 R/W	PHASE 2&5 CLEAR		PHASE 2&6 R/W	PHASE 2&6 CLEAR		PHASE 3&8 R/W	PHASE 3&8 CLR TO Ø4&Ø8		PHASE 3&8 CLEAR		PHASE 4&8 R/W	PHASE 4&8 CLEAR		FLASH
A	R	R	R	G	Y	R	R	R	R	R	R	R	R	R	Y
B	R	R	R	G	Y	R	R	R	R	R	R	R	R	R	Y
C	R	R	R	G	Y	R	R	R	R	R	R	R	R	R	Y
D	~~G~~ / G	~~Y~~ / G	G	G	Y	R	R	R	R	R	R	R	R	R	Y
E	G	G	G	G	Y	R	R	R	R	R	R	R	R	R	Y
F	G	G	G	G	Y	R	R / ~~G~~	R / ~~Y~~	R	R/~~Y~~	R	R	R	R	Y
G	R	R	R	R	R	R	G	G	G	Y	R	G	Y	R	R
H	R	R	R	R	R	R	~~G~~ / G	~~Y~~ / G	G	~~Y~~/Y	R	G	Y	R	R
I	R	R	R	R	R	R	R	R	R	R	R	G	Y	R	R
J	R / ~~G~~	R / ~~Y~~	R	R	R	R	R	R	R	R	R	G	Y	R	R

(*) SEE SHEET 172 - SLACK.

FOR LOOP DETECTOR, PHASE TIMING, AND PHASE FUNCTION CHARTS SEE SHEET 184 .

SCALE IN FEET 0 20 40

CALCULATED NJG CHECKED MAL

SIGNAL DESIGN
SR 44 AT AUBURN ROAD

LAK-44-0.01

PLOTTED BY:jgrmovse PLOT SUBMITTED:11-FEB-1999 16:40
FILE:d09866bburnip PROJECT:d09866bburnip FINAL TRACING:b&nb09866CPA.DGN
09866CPA.DGN