CALC. BY ____ DATE ____ CHKD. BY ____ DATE ____	LAK – 306 – 6.82	OHIO FHWA REGION 5	92/92

REINFORCING STEEL BAR SCHEDULE

SUPERSTRUCTURE – PHASE I

MARK	NO. REQUIRED		TOTAL	LENGTH	TYPE	A	B	C	D	H	WEIGHT (LBS)
ES501			630	42'–8"	STR.						28,036
ES502	1–Series of 77			3'–8" / 41'–8"	STR.		Vary By 6"				1,821
ES503			1,383	30'–0"	STR.						43,274
ES504			37	3'–8"	STR.						142
ES505	1–Series of 84			1'–2" / 42'–8"	STR.		Vary By 6"				1,921
ES506			55	23'–6"	STR.						1,348
ES507			357	2'–8"	6	1'–3"	10"	10"			994
ES508			357	3'–0"	6	1'–7"	10"	10"			1,117
ES509			361	6'–9"	6	5'–8"	8"	8"			2,542
ES510			359	7'–1"	11	2'–11"	8"	2'–11"			2,651
ES511			150	19'–11"	STR.						3,116
ES601			630	43'–3"	STR.						40,926
ES602	1 Series of 77			4'–3" / 42'–3"	STR.		Vary By 6"				2,689
ES603			12	2'–0"	STR.						36
ES605	1 Series of 84			1'–5" / 42'–11"	STR.		Vary By 6"				2,797
ES606			78	30'–0"	STR.						3,515
ES607			6	29'–0"	STR.						261
ER501			56	14'–8"	STR.						*
ER502			8	6'–2"	STR.						*
ER503			132	4'–8"	STR.						*
ER510			4	14'–11"	STR.						*
ER511			4	22'–6"	STR.						*
				PHASE I SUPERSTRUCTURE TOTAL = 137,186 LBS.							

SUPERSTRUCTURE – PHASE II

MARK	NO. REQUIRED		TOTAL	LENGTH	TYPE	A	B	C	D	H	WEIGHT (LBS)
ES521			647	34'–9"	STR.						23,450
ES522	1–Series of 67			1'–3" / 34'–3"	STR.		Vary By 6"				1,241
ES523			1,019	30'–0"	STR.						31,885
ES524			27	3'–8"	STR.						103
ES525	1–Series of 61			4'–0" / 34'–0"	STR.		Vary By 6"				1,209
ES526			41	23'–6"	STR.						1,005
ES527			357	2'–8"	6	1'–3"	10"	10"			994
ES528			357	3'–0"	6	1'–7"	10"	10"			1,117
ES529			361	6'–9"	6	5'–8"	8"	8"			2,542
ES530			359	7'–1"	11	2'–11"	8"	2'–11"			2,652
ES531			108	19'–11"	STR.						2,244
ES621			647	34'–9"	STR.						33,770
ES622	1 Series of 67			1'–3" / 34'–3"	STR.		Vary By 6"				1,787
ES623			12	2'–0"	STR.						36
ES625	1 Series of 61			4'–0" / 34'–0"	STR.		Vary By 6"				1,741
ES626			78	30'–0"	STR.						3,515
ES627			6	29'–0"	STR.						261
ER521			56	14'–8"	STR.						*
ER522			8	6'–2"	STR.						*
ER523			132	4'–8"	STR.						*
ER533			4	22'–7"	STR.						*
ER534			4	14'–11"	STR.						*
				PHASE II SUPERSTRUCTURE TOTAL = 109,552 LBS.							

SUPERSTRUCTURE – PHASE III

MARK	NO. REQUIRED		TOTAL	LENGTH	TYPE	A	B	C	D	H	WEIGHT (LBS)
ES533			141	30'–0"	STR.						4,412
ES534			3	3'–8"	STR.						11
ES536			6	23'–6"	STR.						147
ES541			21	19'–11"	STR.						436
ES633			12	2'–0"	STR.						36
				PHASE III SUPERSTRUCTURE TOTAL = 5,042 LBS.							

PIERS

MARK	NO. REQUIRED		TOTAL	LENGTH	TYPE	A	B	C	D	H	WEIGHT (LBS)
				PIER #1							
1SP401			1	14'–8"	51						279
1P402			13	12'–5"	10	3'–4"	2'–8"				108
1P501			4	15'–8"	STR.						65
1P601			12	2'–10"	STR.						51
1P701			10	8'–6"	STR.						174
1P702			10	10'–0"	1	8'–8"					204
1P801			14	7'–10"	5	6'–8"	1'–4"				293
1P802			14	17'–8"	STR.						661
1P803			8	15'–8"	STR.						335
1P804			4	6'–10"	5	3'–8"	3'–4"				73
				PIER #1 TOTAL = 2,243 LBS.							
				PIER #2							
2SP401			1	12'–2"	51						232
2P402			13	12'–5"	10	3'–4"	2'–8"				108
2P501			4	15'–8"	STR.						65
2P601			12	2'–10"	STR.						51
2P701			10	8'–6"	STR.						174
2P702			10	10'–0"	1	8'–8"					204
2P801			14	7'–10"	5	6'–8"	1'–4"				293
2P802			14	15'–2"	STR.						567
2P803			8	15'–8"	STR.						335
2P804			4	6'–10"	5	3'–8"	3'–4"				73
				PIER #2 TOTAL = 2,102 LBS.							
				PIER #3							
3SP401			1	13'–9"	51						265
3P402			13	12'–5"	10	3'–4"	2'–8"				108
3P501			4	15'–8"	STR.						65
3P601			12	2'–10"	STR.						51
3P701			10	8'–6"	STR.						174
3P702			10	10'–0"	1	8'–8"					204
3P801			14	7'–10"	5	6'–8"	1'–4"				293
3P802			14	16'–9"	STR.						626
3P803			8	15'–8"	STR.						335
3P804			4	6'–10"	5	3'–8"	3'–4"				73
				PIER #3 TOTAL = 2,194 LBS.							

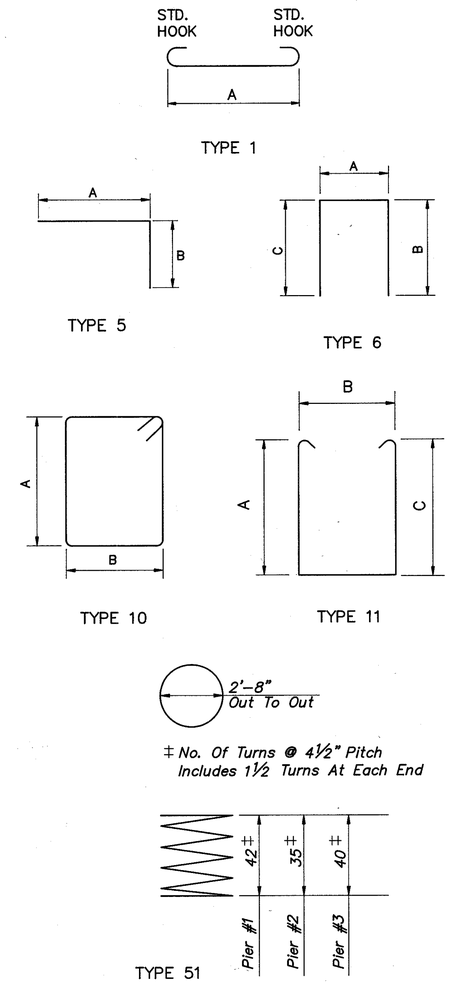

Notes:

1. *All Dimensions Are Out To Out Of Bars*
2. *All Reinforcing Bars Shall be Epoxy Coated*
3. ** – Included With Item 517, Railing, For Payment*

CT Consultants, Inc.
Engineers • Architects • Planners
Willoughby • Mentor • Columbus • North Canton • Youngstown

29/29

REINFORCING SCHEDULE
BRIDGE No. LAK–306–0691
OVER STATE ROUTE 2
LAKE COUNTY

DESIGNED	DRAWN	TRACED	CHECKED	REVIEWED	DATE	REVISED
J.P.R.	M.T.W.	M.T.W.	J.E.A.	BJA	8/31/90	