CALC. BY ____ DATE ____	LAK – 306 – 6.82	OHIO
CHKD. BY ____ DATE ____		FHWA REGION 5

90 / 92

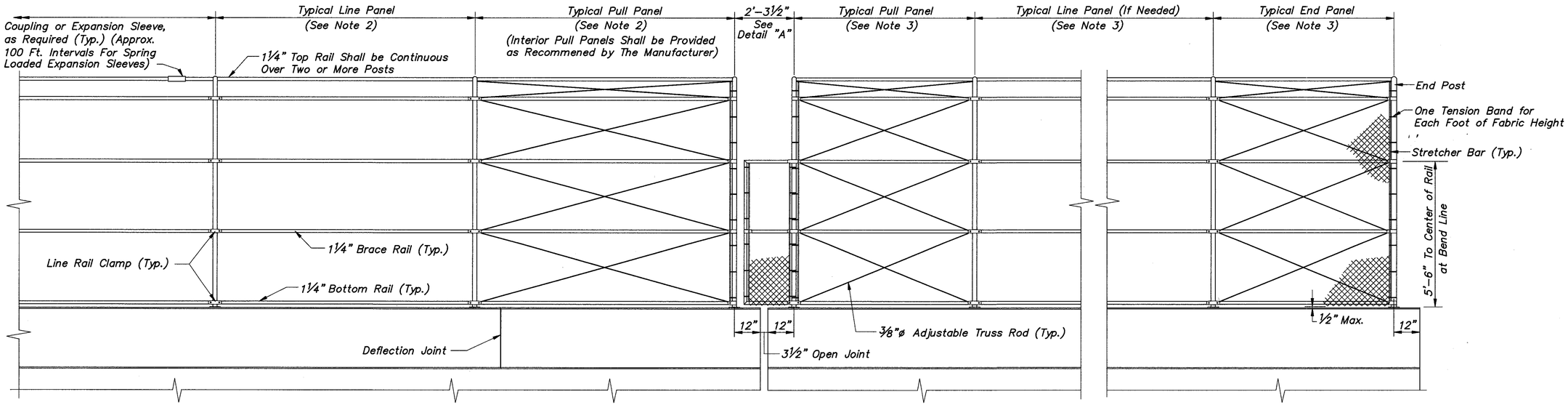

TYPICAL RAILING ELEVATION
(OUTSIDE ELEVATION)

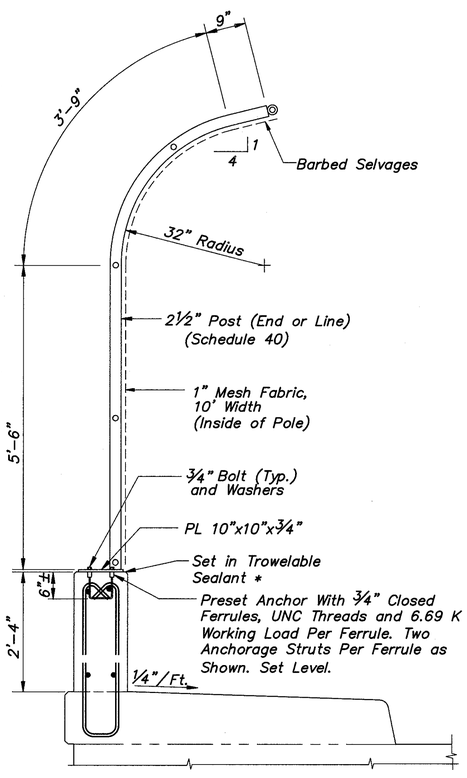

TYPICAL SIDEWALK & PARAPET SECTION
* (Federal Specification TT–S–00227E, Type I, Class A)

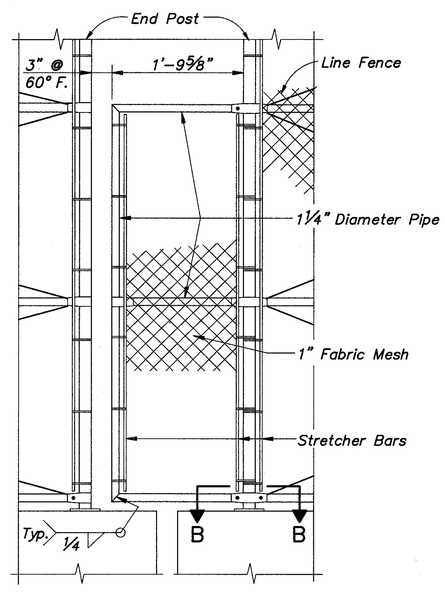

DETAIL "A"
(EXPANSION PANEL)

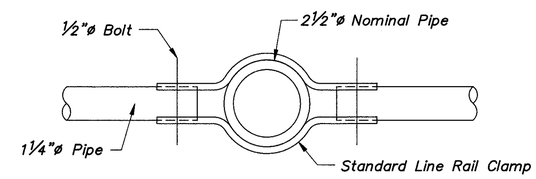

SECTION B–B

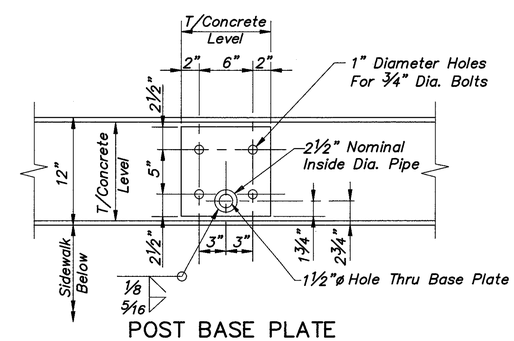

POST BASE PLATE
PLAN VIEW

NOTES:

1. ITEM 607–FENCE TYPE CL, AS PER PLAN

   This Item Includes the Furnishing of All Materials, Labor, Equipment and Incidentals Including the Preset Anchor with Closed Ferrules Necessary to Complete the Fencing. Materials and Workmanship Shall Meet the Requirements of Item 607 Except that Aluminum Alloy Posts and Base Plates Shall not be used. Chain Link Fence shall Conform to the Construction and Materials Specification 710.03. Aluminum Alloy Fabric AASHTO M–181, Type III Shall be Used. Posts Shall be Vertical. Brace Rail Shall be Parallel to the Grade Line. Fence Posts Shall be Galvanized Steel (ASTM F669, Group IC), 2.875" O.D., 0.160" Thick (Fy = 50,000 psi). Rails Shall be Galvanized Steel (ASTM F669, Group IC), 1.66" O.D., 0.083" Thick (Fy = 50,000 psi). Spring Loaded Expansion Sleeves Shall be Provided At Approximately 100 Foot Intervals in All Horizontal Rails. Stretcher Bars and Miscellaneous Hardware Shall be That of the Chain Link Fence Industry Standard. Base Plates and Miscellaneous Brackets for Steel Posts may be of A36 or A572 Steel Plate. Tension Bands Shall be a Minimum of 12 Gauge Steel by ⅞ Inches Wide Assembled with 5/16 Inch Diameter by 1¼ Inch Bolts. All Parts Shall be Galvanized Steel Conforming to CMS 710.02 and All Galvanizing Shall be Done After Fabrication. Field Welding Shall not be Permitted. Payment Shall be Made Under: ITEM 607–FENCE TYPE CL, AS PER PLAN.

2. See Sheet 24/29 For Fence Post Spacing on Superstructure Parapet.

3. See Sheet 12/29 and 15/29 For Fence Post Spacing on Wingwall Parapets.

4. Notation: Typ. – Typical, Max. – Maximum, Approx. – Approximate, Dia. – Diameter.

CT Consultants, Inc.
Engineers • Architects • Planners
Willoughby • Mentor • Columbus • North Canton • Youngstown

27/29

FENCE DETAILS
BRIDGE NO. LAK–306–0691
OVER STATE ROUTE 2
LAKE COUNTY

DESIGNED	DRAWN	TRACED	CHECKED	REVIEWED	DATE	REVISED
J.P.R	R.L.B.	R.L.B.	J.E.A.	EJA	8/31/90	