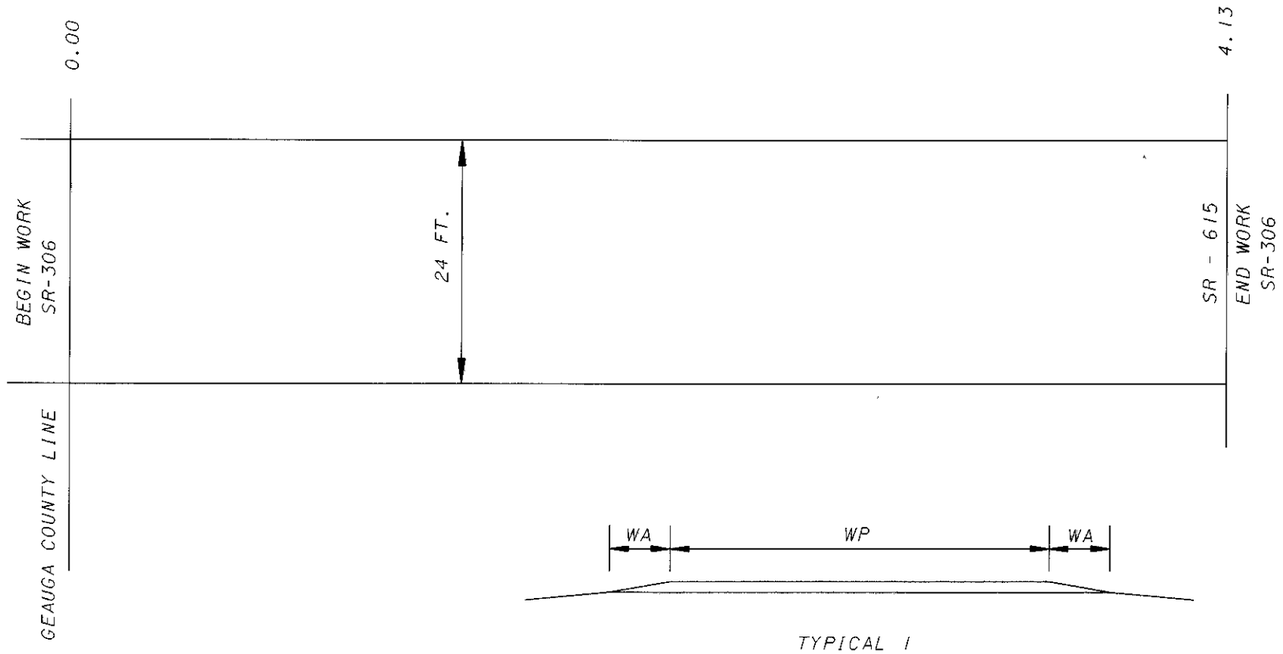


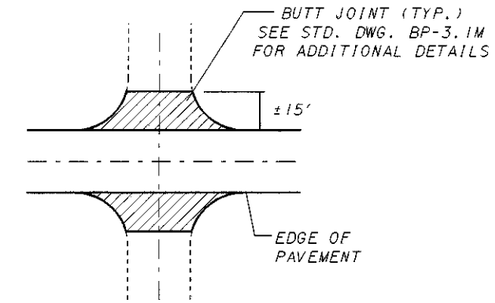


TYPICAL INTERSECTION DETAIL

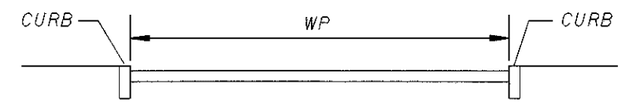


TYPICAL 2

PAVEMENT REPAIR QUANTITIES

| ROUTE | LOG PONT TO LOG POINT | LENGTH | | TYPICAL | WP | WA | PAVEMENT AREA | 448 ASPHALT CONCRETE INTERMEDIATE COURSE, TYPE 1, PG 64-22 (0"-1/2") | 407 TACK COAT FOR INTERMEDIATE COURSE @ 0.05 GAL/SQ.YD. | 446 ASPHALT CONCRETE SURFACE COURSE, TYPE 1H, AS PER PLAN (1½") | 254 PAVEMENT PLANING BITUMINOUS, AS PER PLAN | 407 TACK COAT @ 0.10 GAL/SQYD |
|---|---|---|---|---|---|---|---|---|---|---|---|---|
| | | MILE | FT. | | FT. | FT. | SQ.YD. | SQ.YD. | GALLON | CU.YD. | SQ.YD. | GALLON |
| SR 306 | 0.00 - 3.88 | 3.88 | 20486 | 1 | 24 | | 54629 | 759 | 2732 | 2276 | 54672 | 5463 |
| | 0.00-3.88(RT) | 3.88 | 20486 | 1 | | 2 | 4552 | 63 | 228 | 190 | 4552 | 455 |
| | 0.00-3.88(LT) | 3.88 | 20486 | 1 | | 2 | 4552 | 63 | 228 | 190 | 4552 | 455 |
| | 3.88 - 4.13 | 0.25 | 1320 | 2 | 32 | | 4693 | 65 | 235 | 196 | 4736 | 469 |
| EXTRA AREAS: INTERSECTIONS AND DRIVES | | | | | | | 1760 | 24 | 88 | 61 | 700 | 176 |
| | TOTALS | | | | | | 70186 | 974 | 3511 | 2852 | 69212 | 7018 |

CALCULATED KAS
CHECKED LDH

PAVEMENT SUB-SUMMARY

LAKE COUNTY
LAK-306-0.00



I:\PROJECTS\PID19489\19489GBA.DGN 19-OCT-1999 10:47AM jgrmovse