CALC BY MJN DATE 6/26/92	LAK – 283 – 3.83	OHIO	3/79
CHKD BY TJH DATE 7/9/92	PLAN 81	FHWA REGION	

TYPICAL SECTIONS
TYPE 404

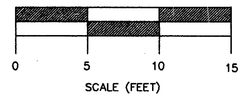

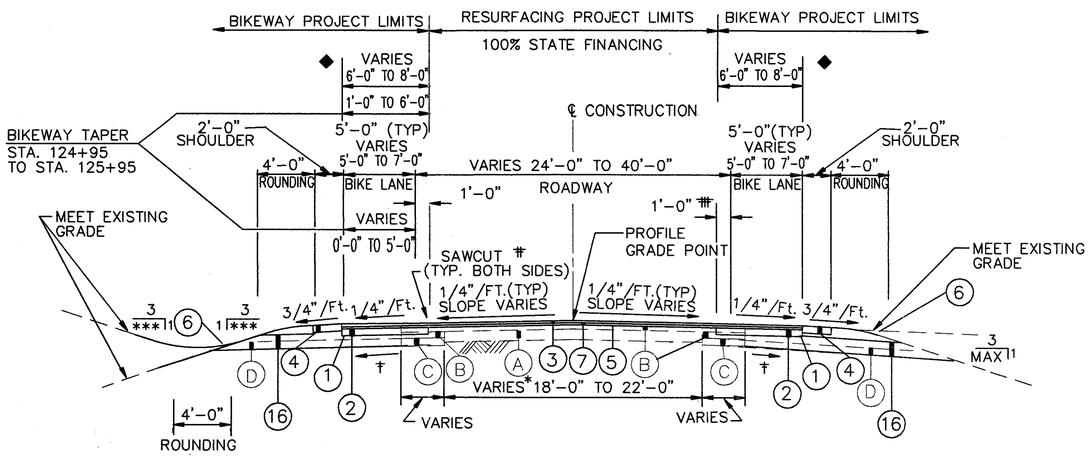

NORMAL SECTION

STA. 124+95 TO STA. 136+12
STA. 150+64 TO STA. 164+50
STA. 181+01 TO STA. 186+88 ***** & *
STA. 195+51 TO STA. 204+06*
STA. 221+26 TO STA. 266+35 [STATION EQUATION: 266+32.64 (BK) = 266+34.99 (AH)]
STA. 270+00 TO STA. 274+40

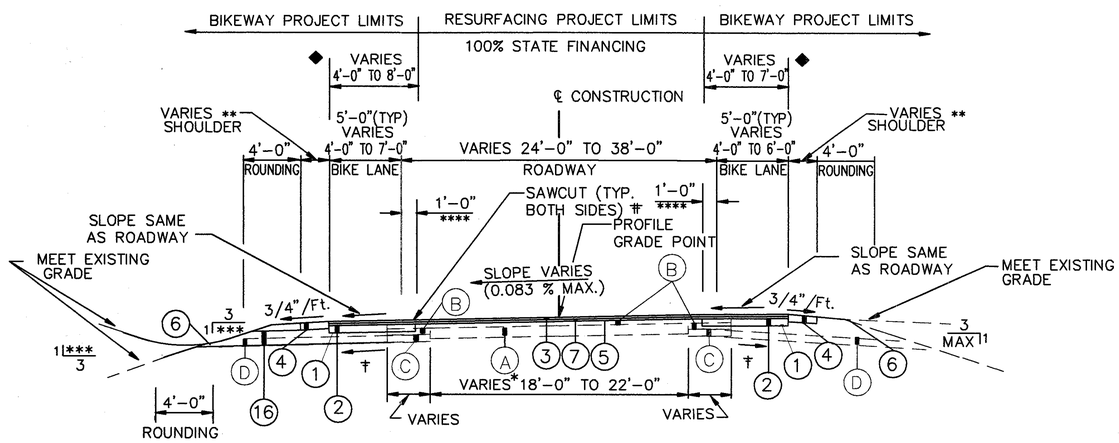

NOTE: REVERSE THIS SECTION FOR SUPERELEVATED CURVES TO THE OPPOSITE DIRECTION

SUPERELEVATED AND TRANSITION SECTION

STA. 136+12 TO STA. 141+51
STA. 144+88 TO STA. 150+64
STA. 164+50 TO STA. 165+49
STA. 166+03 TO STA. 172+81
STA. 176+52 TO STA. 181+01 *****
STA. 186+88 TO STA. 195+51 *
STA. 204+06 TO STA. 221+26 *
STA. 266+35 TO STA. 270+00
STA. 274+40 TO STA. 284+00

LEGEND

(1) ITEM 408 – BITUMINOUS PRIME COAT
(2) ITEM 301 – 7 3/4" BITUMINOUS AGGREGATE BASE AC–20
(3) ITEM 404 – 1 1/4" ASPHALT CONCRETE SURFACE COURSE AC–20
(4) ITEM 411 – 6" STABILIZED CRUSHED AGGREGATE
(5) ITEM 407 – TACK COAT
(6) ITEM 660 – SODDING
(7) ITEM 403 – 0" TO 3/4" ASPHALT CONCRETE, AC–20, AS PER PLAN
(13) ITEM 606 – GUARDRAIL, TYPE 5
(16) ITEM 605 – AGGREGATE DRAIN

(A) EXIST. CONCRETE OR BRICK PAVEMENT (VARIES 4" TO 11")
(B) EXIST. ASPHALT PAVEMENT (VARIES 4" TO 10")
(C) EXIST. SUBBASE (VARIES 8" TO 1'–1")
(D) EXIST. AGGREGATE DRAIN

◆ SEE PLAN SHEETS 19 THROUGH 34 FOR PROPOSED WIDTH DIMENSIONS.

* 22'–0" EXISTING CONCRETE PAVEMENT WIDTH FROM STA. 186+70 TO STA. 221+26

** TYPICAL 2'–0" SHOULDER EXCEPT AT THE LOCATIONS NEAR RAILROAD TRESTLE PIER – SEE DETAIL SHT. 16.

*** 3:1 SLOPE TYPICAL AT PROPOSED DITCH SLOPE VARIES ELSEWHERE TO MEET EXISTING GRADE.

**** 1'–0" TYPICAL, WIDTH TRANSITIONS FROM 1'–0" TO 0'–0" AT LAK–283–0460 AND LAK–283–0472 BRIDGES. TRANSITION OVER TAPER LENGTHS SHOWN ON PLANS.

***** RIGHT SIDE OF TYPICAL SECTIONS VARIES AS SHOWN ON SHEET 4.

‡ AGGREGATE DRAINS TO SLOPE AT 1/2" PER FOOT MINIMUM. SEE SHEET 10 FOR LOCATIONS. PLACE ONLY ON LOW SIDE OF SUPERELEVATED SECTIONS.

‡ SAWCUTTING AS PER 203.04 (f).

‡‡ PAVEMENT REMOVAL VARIES FROM 4'–0" TO 1'–0" FROM STA. 127+50 TO STA. 131+50, RIGHT.

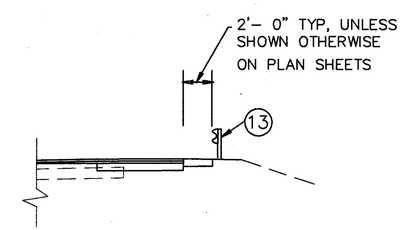

TYPICAL GUARDRAIL LOCATION

PR10520/TYP1 7/8/93