CALC. BY: DATE:	LAKE COUNTY LAK-20-2.70	OHIO
CHKD. BY: DATE:		FHWA REGION 5
		FEDERAL PROJECT

79 / 98

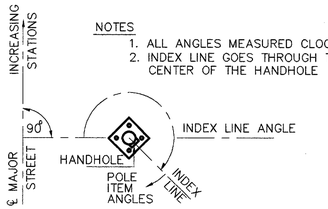

NOTES
1. ALL ANGLES MEASURED CLOCKWISE
2. INDEX LINE GOES THROUGH THE CENTER OF THE HANDHOLE

TC-81.10 SIGNAL SUPPORT

INTERSECTION	ITEM	DESIGN NO.	POLE HEIGHT (FEET)	FOUNDATION STATION	FOUNDATION OFFSET	INDEX LINE ANGLE (DEG.)	ANGLES (DEG.) FROM INDEX LINE: SPAN WIRE MOUNTING HEIGHT ANGLE DEG.	SPAN WIRE MOUNTING HEIGHT HEIGHT FEET	POLE MOUNTED CONTROLLER HINGE LOCATION	SIGN FLASHER ASSEMBLY	SCHOOL SIGN ASSEMBLY	CONTROLLER	POWER SERVICE	CABLE ENTRANCE (12' FROM TOP)	INTERCONNECT POLE SPLICE BOX	2" CAPPED CONDUIT ELL (FUTURE USE)	HANDHOLE	
RIVER ROAD	P1	PED	14	32+24	18'L	0				270		180					180	
	P2	PED	14	24+50	18'R	0				270		180					180	
	P3	PED	14	21+38	17'L	0					270						180	
	P4	PED	14	12+75	17'R	0					270						180	

ORIENTATION ANGLE CHART

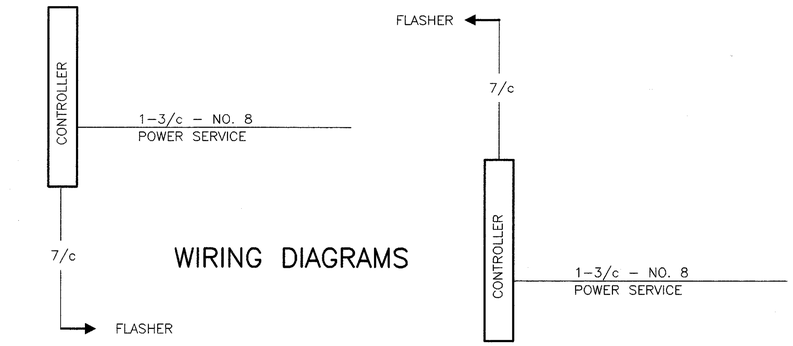

STA. 32+29

STA. 24+50

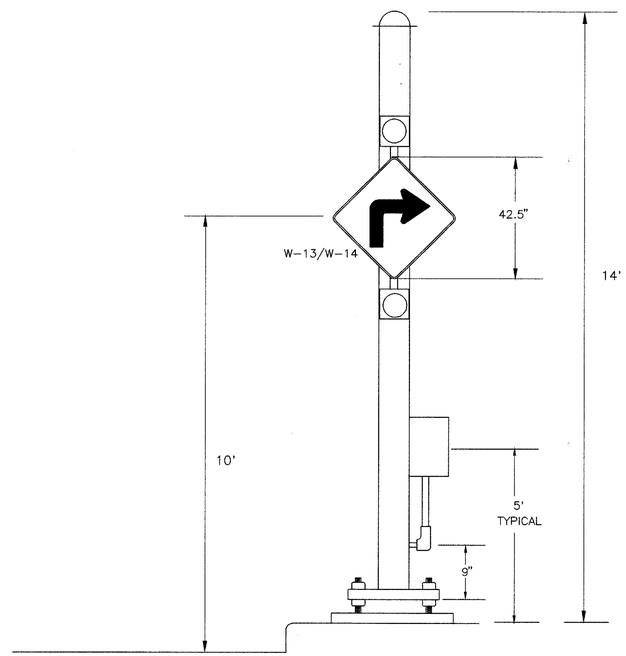

SIGN FLASHER ASSEMBLY
WITH PEDESTAL, 14', TRANSFORMER BASE

ITEM	TOTAL	UNIT	DESCRIPTION
625	4	EACH	GROUND ROD
625	891	LIN FT	CONDUIT, 2", 713.04
625	812	LIN FT	TRENCH
625	7	EACH	PULL BOX, MISC: AS PER PLAN
625	92	LIN FT	CONDUIT JACKED OR DRILLED UNDER PAVEMENT, 3"
625	75	LIN FT	TRENCH IN PAVED AREA TYPE "B"
630	12.50	SQ. FT.	SIGN, FLAT SHEET, TYPE G
630	2	EACH	SIGN SUPPORT ASSEMBLY, POLE MOUNTED
630	2	EACH	REMOVAL OF GROUND MOUNTED SIGN AND STORAGE
631	2	EACH	SIGN FLASHER ASSEMBLY
631	2	EACH	SCHOOL SPEED LIMIT SIGN ASSEMBLY, 24 x 42 INCHES
632	1.56	CU YD	CONCRETE FOR ANCHOR BASE FOUNDATION
632	4	EACH	PEDESTAL, MISC.: PEDESTAL, 14', TRANSFORMER BASE
632	181	LIN FT	POWER CABLE, 3 CONDUCTOR, NO. 8 AWG
632	980	LIN FT	SIGNAL CABLE, 7 CONDUCTOR NO. 14 AWG
632	3	EACH	CONDUIT RISER, 1 1/2"
632	1	EACH	REMOVAL OF TRAFFIC SIGNAL INSTALLATION, AS PER PLAN