CALC. BY: DATE:	LAKE COUNTY LAK-20-2.70	OHIO
CHKD. BY: DATE:		FHWA REGION 5
		FEDERAL PROJECT

77/98

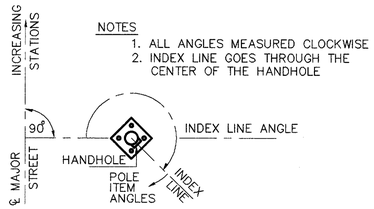

NOTES
1. ALL ANGLES MEASURED CLOCKWISE
2. INDEX LINE GOES THROUGH THE CENTER OF THE HANDHOLE

TC-81.10 SIGNAL SUPPORT

INTERSECTION	ITEM	DESIGN NO.	POLE HEIGHT (FEET)	FOUNDATION STATION	FOUNDATION OFFSET	INDEX LINE ANGLE (DEG.)	ANGLES (DEG.) FROM INDEX LINE: SPAN WIRE MOUNTING HEIGHT ANGLE DEG.	SPAN WIRE MOUNTING HEIGHT HEIGHT FEET	POLE MOUNTED CONTROLLER HINGE LOCATION	PEDESTRIAN SIGNALS	PEDESTRIAN PUSH BUTTONS	CONTROLLER	POWER SERVICE	CABLE ENTRANCE (12" FROM TOP)	INTERCONNECT POLE SPLICE BOX	2" CAPPED CONDUIT ELL (FUTURE USE)	HANDHOLE	
EUCLID AVE.	P1	PED	14	237+30	24'R	0						180					180	
	P2	PED	14	244+82	21'L	0						180					180	

ORIENTATION ANGLE CHART

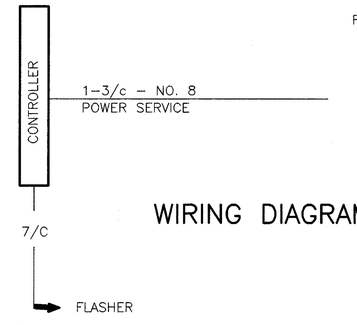

STA. 237+30

WIRING DIAGRAMS

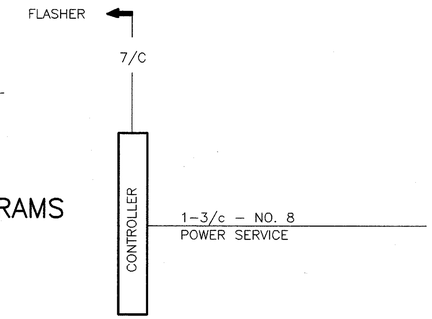

STA. 244+82

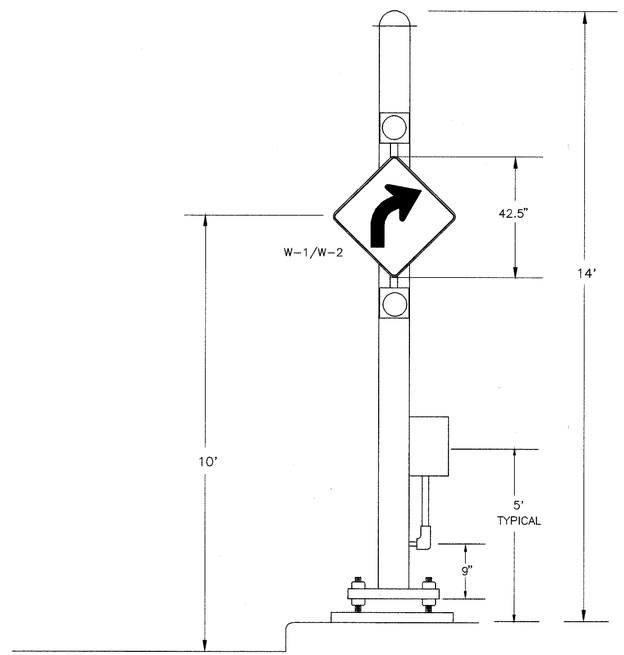

TYPICAL

SIGN FLASHER ASSEMBLY
WITH PEDESTAL, 14', TRANSFORMER BASE

ITEM	TOTAL	UNIT	DESCRIPTION
625	2	EACH	GROUND ROD
625	2	EACH	PULL BOX, MISC.: AS PER PLAN
625	82	LIN FT	CONDUIT, 2", 713.04
625	41	LIN FT	CONDUIT, JACKED OR DRILLED, UNDER PAVEMENT, SIZE 3"
625	82	LIN FT	TRENCH
630	12.50	SQ. FT.	SIGN, FLAT SHEET, TYPE G
630	2	EACH	SIGN SUPPORT ASSEMBLY, POLE MOUNTED
630	2	EACH	REMOVAL OF GROUND MOUNTED SIGN AND STORAGE
630	2	EACH	REMOVAL OF GROUND MOUNTED SUPPORT AND DISPOSAL
631	2	EACH	SIGN FLASHER ASSEMBLY
632	0.78	CU YD	CONCRETE FOR ANCHOR BASE FOUNDATION
632	2	EACH	PEDESTAL, MISC.: PEDESTAL, 14', TRANSFORMER BASE
632	198	LIN FT	POWER CABLE, 3 CONDUCTOR, NO. 8 AWG
632	2	EACH	CONDUIT RISER, 1 1/2"
632	1	EACH	REMOVAL OF TRAFFIC SIGNAL INSTALLATION, AS PER PLAN

EUCLID AVE. TRAFFIC CONTROL PLAN